SPORTS PARK - NEW RESTROOM BUILDING & WATERLINE EXTENSION

PREPARED FOR:

BUNCOMBE COUNTY, NORTH CAROLINA

GENERAL SERVICES DEPARTMENT
40 McMORMICK PLACE,
ASHEVILLE, NC 28801

CODE SUMMARY

LIST OF APPLICABLE CODES

THE FOLLOWING CODES SHALL APPLY TO THIS PROJECT BASED ON ITS GEOGRAPHICAL LOCATION:

BUILDING CODE:
2015 INTERNATIONAL BUILDING CODE WITH 2018 NC AMENDMENTS

ACCESSIBILITY CODE:
2015 INTERNATIONAL BUILDING CODE WITH 2018 NC AMENDMENTS

PLUMBING SYSTEMS:
2015 INTERNATIONAL PLUMBING CODE WITH 2018 NC AMENDMENTS

MECHANICAL SYSTEMS:
2015 INTERNATIONAL MECHANICAL CODE WITH 2018 NC AMENDMENTS

ELECTRICAL SYSTEMS:
2017 NATIONAL ELECTRICAL CODE WITH NC AMENDMENTS

ENERGY CODE:
2015 INTERNATIONAL ENERGY CODE WITH 2018 NC AMENDMENTS

FUEL AND GAS:
2015 INTERNATIONAL FUEL GAS CODE WITH 2018 NC AMENDMENTS

OCCUPANCY U
CONSTRUCTION CLASSIFICATION TYPE 5B
BUILDING AREA BUILDING HEIGHT
ALLOWABLE AREA = 5,500 GSF
ALLOWABLE HEIGHT = 1-STORY @ 40'
RESTROOM AREA = 737 SF RESSIBLE (1 TOTAL)
RESTROOM HT = 1-STORY @ 15'-0"

OCCUPANCY & PLUMBING FIXTURE COUNT
TOTAL OCCUPANCY: 0 PEOPLE

PROVIDED FIXTURES
MALE WATER CLOSETS = 1 ACCESSIBLE (1 TOTAL)
MALE URINALS = 1 ACCESSIBLE (1 TOTAL)
MALE LAVATORIES = 1 ACCESSIBLE (1 TOTAL)
FEMALE WATER CLOSETS = 3 STANDARD 1 ACCESSIBLE (4 TOTAL)
FEMALE LAVATORIES = 2 ACCESSIBLE (2 TOTAL)
FAMILY RESTROOM
1 ACCESSIBLE WATER CLOSET
1 ACCESSIBLE LAVATORY
ELECTRIC WATER COOLER = 2 (HI-LO WITH WATER BOTTLE FILLER)
MOP SINK = 1

ENERGY CONSERVATION THERMAL PROPERTY CALCULATIONS ARE NOT PROVIDED SINCE THIS BUILDING IS NOT INSULATED.

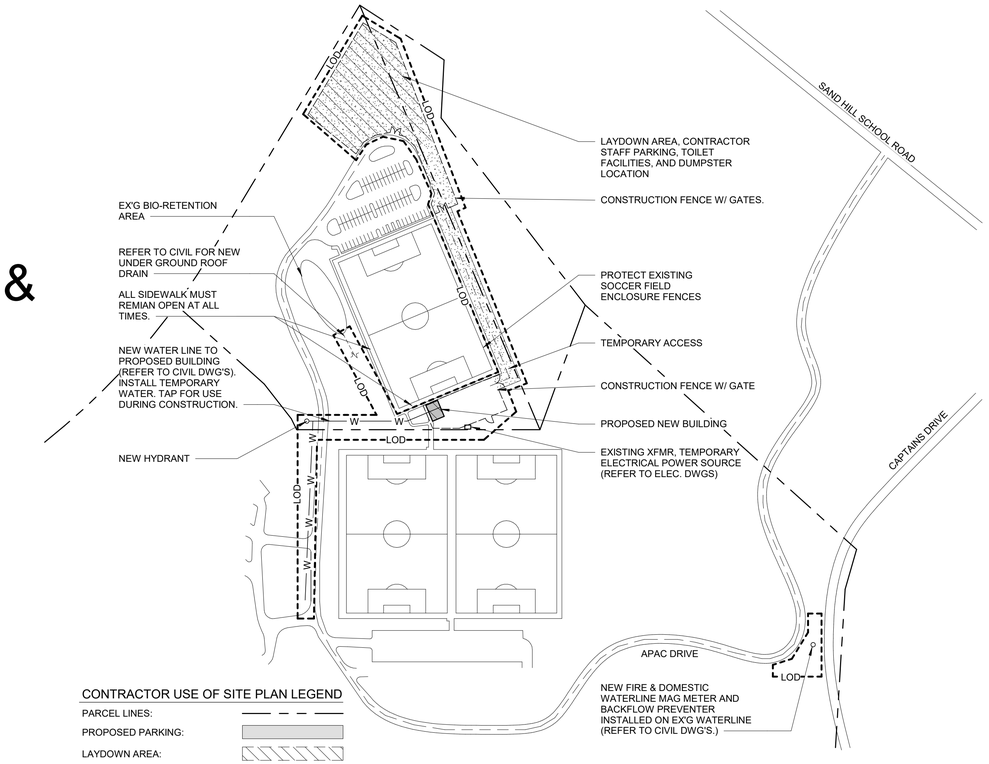

CONTRACTOR USE OF SITE PLAN LEGEND

PARCEL LINES:
PROPOSED PARKING:
LAYDOWN AREA:
PATH TO SITE:
TEMPORARY ACCESS:
LIMITS OF DISTURBANCE ----LOD------

CONTRACTOR USE OF SITE PLAN

NORTH

GENERAL SITE PLAN NOTES

A. THIS DRAWING IS PROVIDED AS AN OVERALL SITE REFRENCE PLAN. SOME ELEMENTS HAVE BEEN INTENTIONALLY LEFT OFF FOR CLARITY. REFER TO OTHER CONSTRUCTION DOCUMENT DRAWINGS FOR SITE GRADING, LAYOUT, UTILITIES, ELECTRICAL, AND OTHER REQUIREMENTS. ALL ELEMENTS ARE NEW UNLESS NOTED OTHERWISE.

B. CONTRACTOR TO COORDINATE ROUTING OF ALL UTILITIES TO ENSURE REQUIRED CLEARANCES AND UNOBSTRUCTED PATHS.

C. CONTRACTOR IS RESPONSIBLE FOR PATCHING AND REPAIRING ANY DISTURBED AREAS AND AREAS IN WHICH THEY DAMAGE DURING CONSTRUCTION.

CONTRACTOR USE OF SITE NOTES

A. CONTRACTOR TO PROVIDE ADEQUATE AND SUBSTANTIAL PROVISIONS TO PROTECT THE BUILDING AND FINISHED SURFACES SCHEDULED TO REMAIN FROM DAMAGE DURING DELIVERY OF EQUIPMENT AND DISPOSAL OF MATERIALS. ALL DAMAGED SURFACES SHALL BE RESTORED TO THEIR ORIGINAL CONDITION.

B. LAWN AREAS DISTURBED BY CONSTRUCTION ACTIVITIES SHALL BE RESTORED BY THE G.C. TO MATCH THEIR ORIGINAL CONDITION.

C. SIDEWALK DAMAGED BY CONSTRUCTION ACTIVITIES SHALL BE RESTORED BY G.C. W/ CONSTRUCTION MATCHING EXISTING ADJACENT CONSTRUCTION. SAWCUT DAMAGED SIDEWALK MATERIALS AT NEAREST CONTROL JOINT OUTSIDE OF DAMAGED AREAS.

D. ALL EX'G SIDEWALKS AND PEDESTRIAN PATHWAYS TO REMAIN OPEN AT ALL TIMES. ANY REQ'D CROSSING OF SAME MUST BE REVIEWED WITH OWNER 48 HRS. IN ADVANCE.

E. VEHICLE PAVEMENTS DAMAGED BY CONSTRUCTION SHALL BE RESTORED BY THE G.C. W/ CONSTRUCTION MATCHING EXISTING ADJACENT CONDITIONS. SAWCUT EXISTING ROADWAY PAVEMENTS AT SOUND MATERIALS OUTSIDE OF DAMAGED AREAS.

F. PROVIDE STORMWATER INLET PROTECTION TO MEET ALL LOCAL STORMWATER PROTECTION AS REQUIRED.

G. G.C. TO CONTRACT WITH PRIVATE UTILITY LOCATING SERVICE TO IDENTIFY AND MARK EXISTING SITE UTILITIES.

H. DUMPSTERS SHALL BE LIMITED TO WITHIN TEMPORARY FENCE ENCLOSURE.

I. SECURE SITE FROM THE PUBLIC DURING CONSTRUCTION. G.C. TO ALLOW OWNER ACCESS AT ALL TIMES.

J. REFER TO CIVIL FOR TREE PROTECTION.

BUNCOMBE COUNTY SPORTS PARK RESTROOM BUILDING

58 APAC DRIVE
ASHEVILLE, NC

Prepared For
BUNCOMBE COUNTY

58 APAC DRIVE, ASHEVILLE, NC

CIVIL ENGINEER
DAVIS CIVIL SOLUTIONS, PA
134 CHARLOTTE HWY A, ASHEVILLE, NC 28803
(828) 299-9449

STRUCTURAL ENGINEER
KLOESEL ENGINEERING, PA
8 MAGNOLIA AVE., SUITE 100, ASHEVILLE, NC 28801
(828) 255-0780

D O M O K U R | A R C H I T E C T S

MECHANICAL ENGINEER
TILDEN WHITE & ASSOCIATES PLLC
15 W. WALNUT ST #202, ASHEVILLE, NC 28801
(828) 255-4327

ELECTRICAL ENGINEER
TILDEN WHITE & ASSOCIATES PLLC
15 W. WALNUT ST #202, ASHEVILLE, NC 28801
(828) 255-4327

VICINITY / SITE MAP

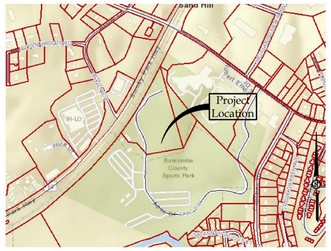

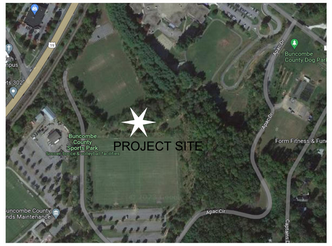

VICINITY MAP

SCALE: N.T.S.

MATERIALS

EARTH
GRAVEL
CONCRETE
CONCRETE BLOCK MASONRY
BRICK MASONRY
CUT STONE
STRUCTURAL STEEL/METAL
ROUGH WOOD/LUMBER
PLYWOOD
FINISH WOOD
GYPSUM BOARD
BATT INSULATION
RIGID INSULATION
GLAZING

ABBREVIATIONS

ACOUS.	ACOUSTICAL	INSUL.	INSULATION
A.F.F.	ABOVE FINISH FLOOR	JT.	JOINT
ALT.	ALTERNATE	MANF'R.	MANUFACTURER (ALSO 'MFR.')
ALUM.	ALUMINUM (ALSO 'AL')	M.C.	MECHANICAL CONTRACTOR
@	AT	M.H.	MANHOLE
BD.	BOARD	M.O.	MASONRY OPENING
BRG.	BEARING	MFG.	MANUFACTURING
BLKG.	BLOCKING	MAX.	MAXIMUM
CLG.	CEILING	MECH.	MECHANICAL
CL	CENTERLINE	MTL.	METAL
COL.	COLUMN	MIN.	MINIMUM
CONC.	CONCRETE	NOM.	NOMINAL
CONT.	CONTINUOUS	N.I.C.	NOT IN CONTRACT
CJ	CONTROL JOINT	N.T.S.	NOT TO SCALE
DET.	DETAIL	O/	ON OR OVER
DIA.	DIAMETER	O.C.	ON CENTER
DN	DOWN	P.C.	PLUMBING CONTRACTOR
D.S.	DOWN SPOUT	PL. LAM.	PLASTIC LAMINATE (ALSO 'PL')
DWG(S).	DRAWING(S)	PLUMB.	PLUMBING
EA.	EACH	+/-	PLUS OR MINUS
E.C.	ELECTRICAL CONTRACTOR	P	PROPERTY LINE
ELEC.	ELECTRICAL	PLYWD.	PLYWOOD
E.P.	ELECTRICAL PANEL	REINF.	REINFORCING
E.T.R.	EXISTING TO REMAIN	R	RISER
E.W.	EACH WAY	R.D.	ROOF DRAIN
E.W.C.	ELECTRIC WATER COOLER	REQ.	REQUIRED
ELEV.	ELEVATION (ALSO 'EL.')	R.O.	ROUGH OPENING
EXIST.	EXISTING (ALSO 'EXG.')	SIM.	SIMILAR
EXP.	EXPANSION	SPECS.	SPECIFICATIONS
E.J.	EXPANSION JOINT	S.S.	STAINLESS STEEL
F.F.	FINISH FLOOR	ST.	STEEL (ALSO 'STL')
F.E.	FIRE EXTINGUISHER ON BRACKET	STRUCT.	STRUCTURAL
F.E.C.	FIRE EXTINGUISHER IN CABINET	S.O.G.	SLAB ON GRADE
F.D.	FLOOR DRAIN	SUSP.	SUSPENDED
F.P.C.	FIRE PROTECTION CONTRACTOR	T	TREAD
FRT	FIRE RETARDANT TREATED	T.O.F.	TOP OF FOOTING
FTG.	FOOTING	T.O.M.	TOP OF MASONRY
F.V.	FIELD VERIFY	T.O.S.	TOP OF STEEL
GA.	GAUGE	TYP.	TYPICAL
GALV.	GALVANIZED	U.N.O	UNLESS NOTED OTHERWISE
G.C.	GENERAL CONTRACTOR	VERT.	VERTICAL
GYP.	GYPSUM	V.T.R.	VENT THRU ROOF
H.M.	HOLLOW METAL	W/	WITH
HORIZ.	HORIZONTAL	WD.	WOOD

SYMBOLS

ROOM NAME 000 — ROOM NAME & NUMBER
000 — DOOR NUMBER
1 — WALL TYPE
0 0'-00" — CEILING HEIGHT/TYPE
A — WINDOW TYPE
00 S A000 E 00 — INTERIOR ELEVATION REFERENCE
00 A000 — EXTERIOR ELEVATION REFERENCE
00 A000 — ENLARGED PLAN/ DETAIL REFERENCE
00 A000 — SECTION CUT REFERENCE
00 A000 / 00 A000 — BUILDING SECTION REFERENCE

DRAWING INDEX

D O M O K U R | A R C H I T E C T S

4651 Medina Road
Akron, Ohio 44321-1315
p 330.666.7878

43 South Broad Street, Suite 201
Brevard, North Carolina 28712-3738
p 828.884.8478

www.domokur.com

MICHAEL G. DOMOKUR REGISTERED ARCHITECT NORTH CAROLINA RALEIGH, NC
PRELIMINARY
NOT FOR CONSTRUCTION
This document may not be reproduced in any manner without the express written authorization of Domokur Architects

Issue	Date	Description
1	11/17/2023	ISSUED FOR BID AND PERMIT

TITLE SHEET, VICINITY MAP, DRAWING INDEX

Project No: 2022090
Project Manager: MTT
Drawn By: AAI

G100

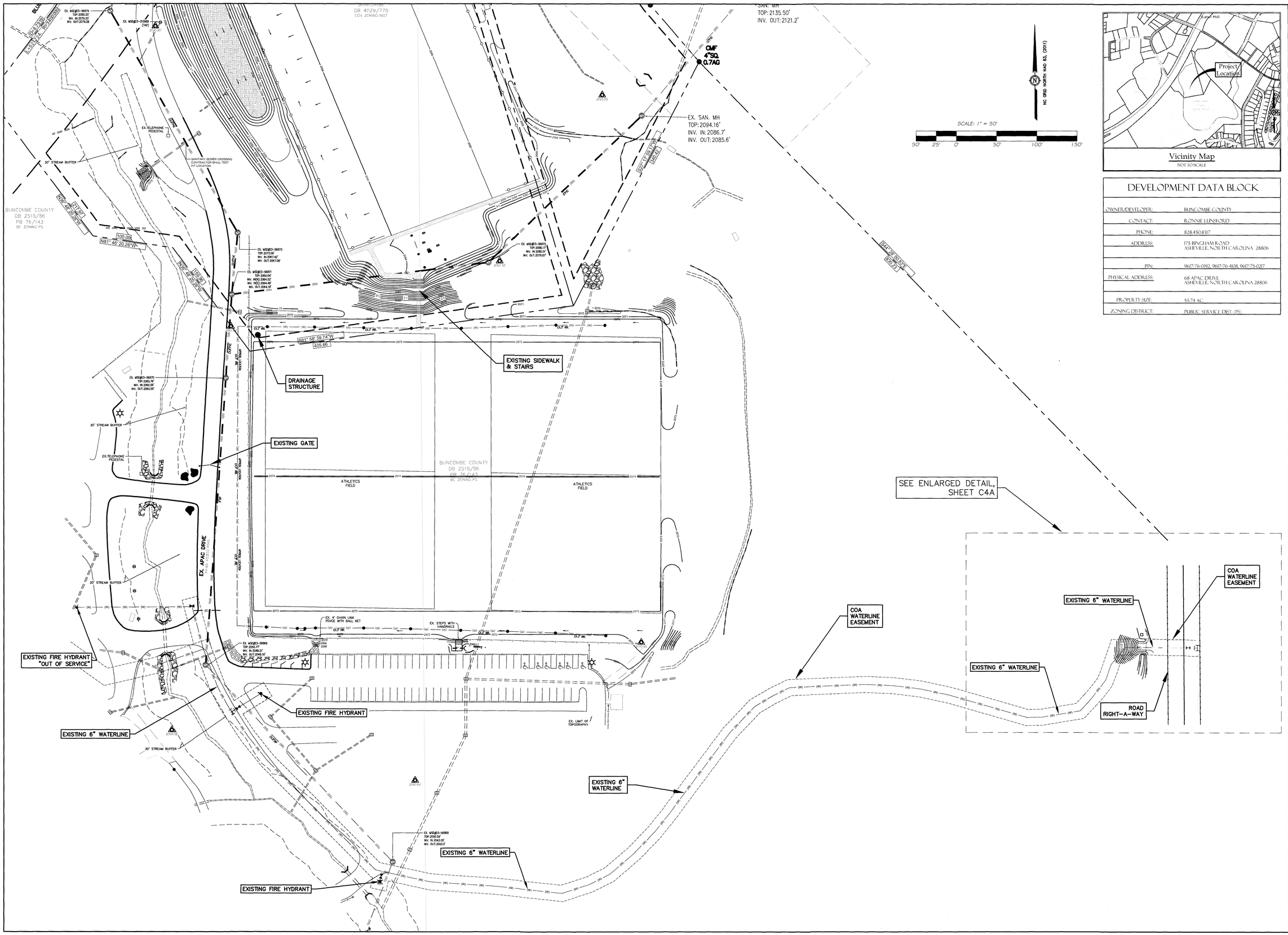

Vicinity Map
NOT TO SCALE

DEVELOPMENT DATA BLOCK

OWNER/DEVELOPER:	BUNCOMBE COUNTY
CONTACT:	RONNIE LUNSFORD
PHONE:	828.450.8317
ADDRESS:	175 BINGHAM ROAD ASHEVILLE, NORTH CAROLINA 28806
PIN:	9617-76-0192, 9617-76-4108, 9617-75-0217
PHYSICAL ADDRESS:	68 APAC DRIVE ASHEVILLE, NORTH CAROLINA 28806
PROPERTY SIZE:	55.74 AC.
ZONING DISTRICT:	PUBLIC SERVICE DIST. (PS)

Davis CivilSolutions, PA
Site/Infrastructure Engineering/Planning
135-A Charlotte Highway • Asheville, North Carolina 28803
828.209.0149 FAX • www.daviscivilsolutions.com

PRELIMINARY NOT FOR CONSTRUCTION

Site Plan & Waterline Extension For BUNCOMBE COUNTY SPORTS PARK
68 APAC DRIVE
ASHEVILLE, NORTH CAROLINA

Job No.: 23117
Date: November 15, 2023
Scale: 1"=50'
Revision:

Existing Conditions

Sheet
C1

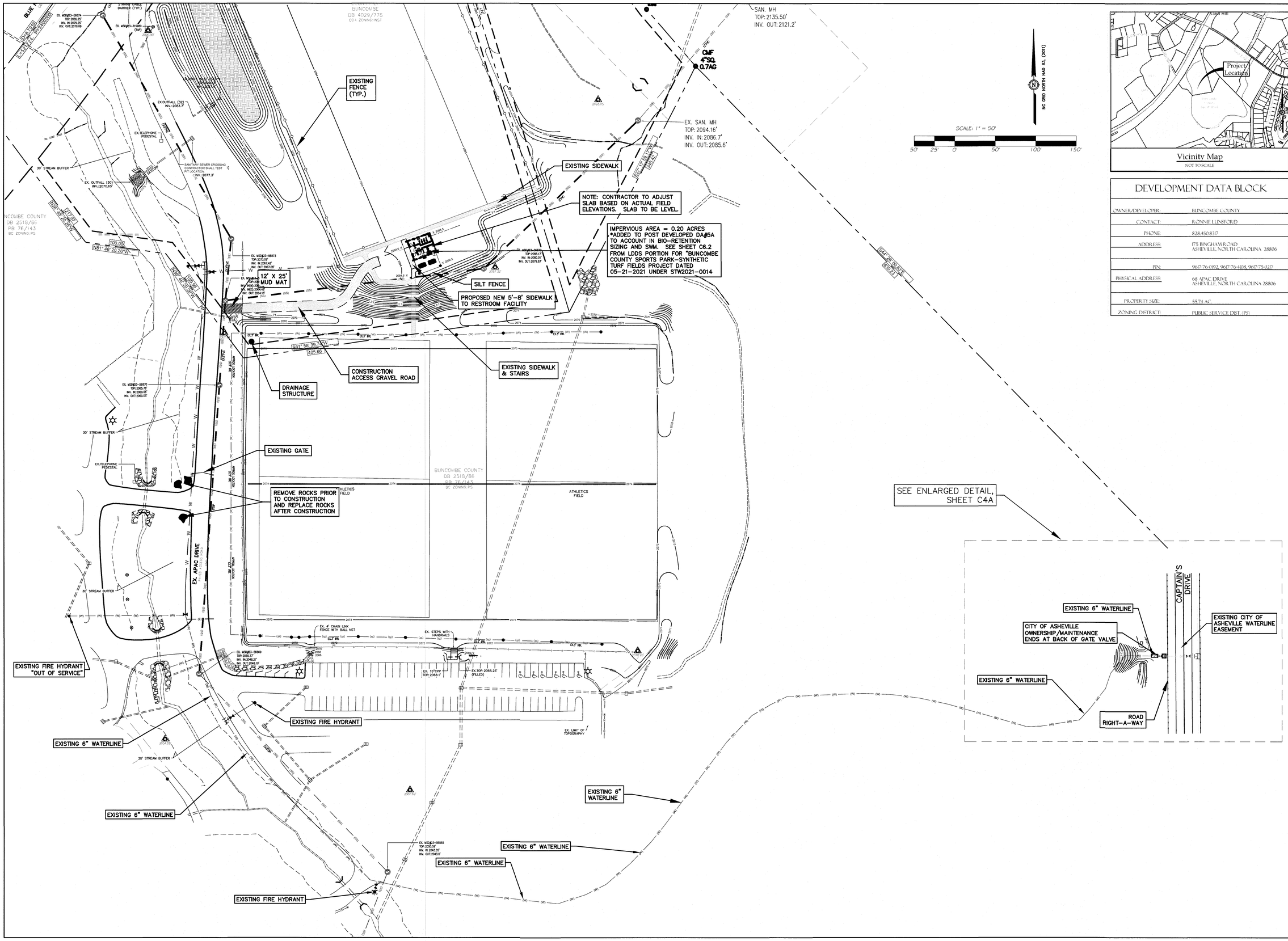

Vicinity Map
NOT TO SCALE

DEVELOPMENT DATA BLOCK

OWNER/DEVELOPER:	BUNCOMBE COUNTY
CONTACT:	RONNIE LUNSFORD
PHONE:	828.450.8317
ADDRESS:	175 BINGHAM ROAD ASHEVILLE, NORTH CAROLINA 28806
PIN:	9617-76-0192, 9617-76-4408, 9617-75-0217
PHYSICAL ADDRESS:	68 APAC DRIVE ASHEVILLE, NORTH CAROLINA 28806
PROPERTY SIZE:	55.74 AC
ZONING DISTRICT:	PUBLIC SERVICE DIST. (PS)

Davis CivilSolutions, PA
Site/Infrastructure Engineering/Planning
135-A Charlotte Highway, Asheville, North Carolina 28803
828.299.9449 PH • www.daviscivilsolutions.com

PRELIMINARY NOT FOR CONSTRUCTION

Site Plan & Waterline Extension For BUNCOMBE COUNTY SPORTS PARK 68 APAC DRIVE

ASHEVILLE, NORTH CAROLINA

Job No.: 23117
Date: November 15, 2023
Scale: 1"=50'
Revision:

Layout

Sheet
C2

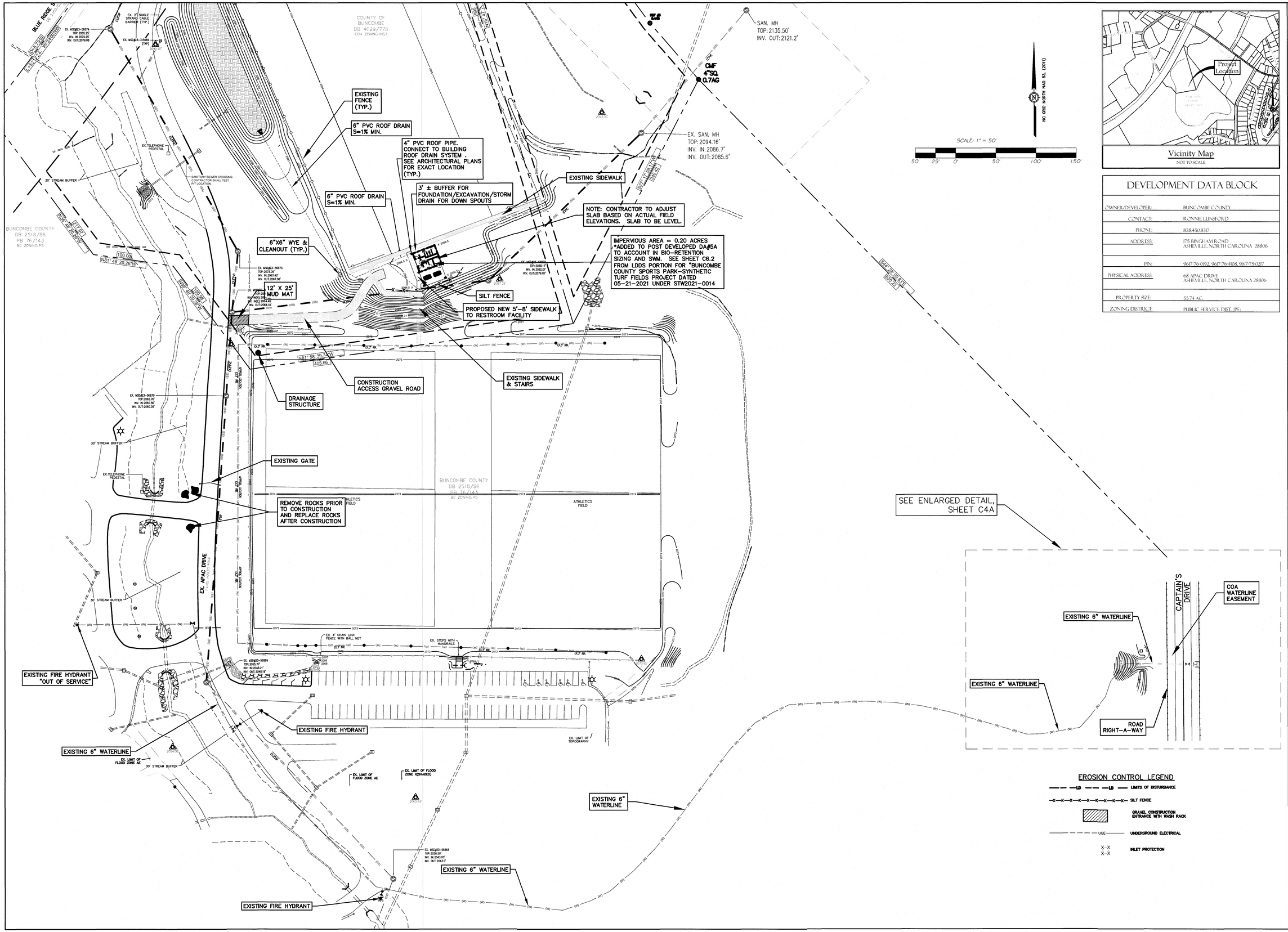

Vicinity Map
NOT TO SCALE

DEVELOPMENT DATA BLOCK

OWNER/DEVELOPER:	BUNCOMBE COUNTY
CONTACT:	RONNIE LUNSFORD
PHONE:	828.450.8317
ADDRESS:	175 BINGHAM ROAD ASHEVILLE, NORTH CAROLINA 28806
PIN:	9647-76-0192, 9647-76-4108, 9647-75-0217
PHYSICAL ADDRESS:	68 APAC DRIVE ASHEVILLE, NORTH CAROLINA 28806
PROPERTY SIZE:	55.74 AC.
ZONING DISTRICT:	PUBLIC SERVICE DIST. (PS)

Davis CivilSolutions, PA
Site/Infrastructure Engineering/Planning
135-A Charlotte Highway• Asheville, North Carolina 28803
828.299.9449 PH • www.daviscivilsolutions.com

PRELIMINARY NOT FOR CONSTRUCTION

Site Plan & Waterline Extension For BUNCOMBE COUNTY SPORTS PARK 68 APAC DRIVE

ASHEVILLE, NORTH CAROLINA

Job No.: 23117
Date: November 15, 2023
Scale: 1"=50'
Revision:

Grading, Stormwater, and Erosion Control

Sheet
C3

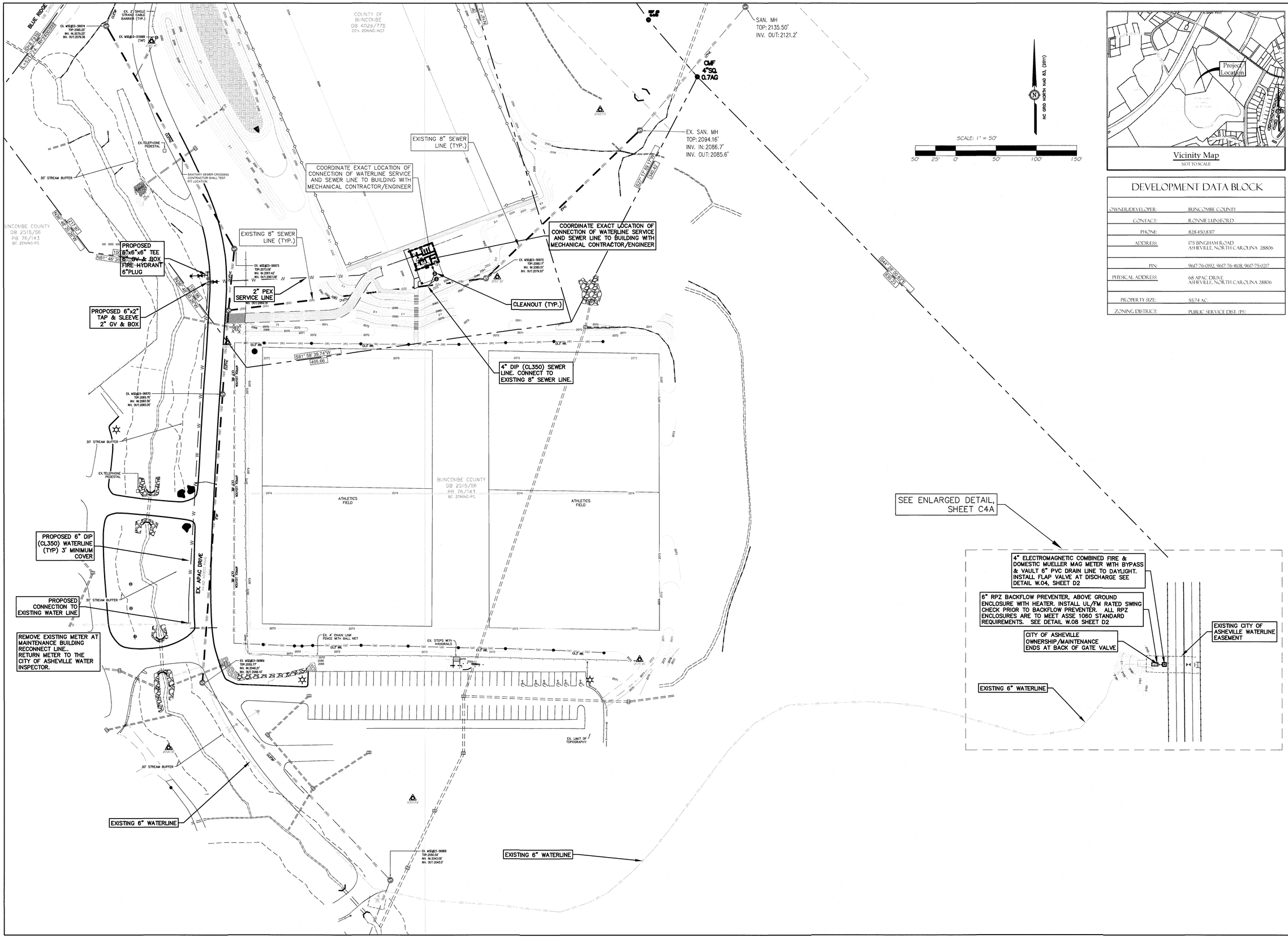

Vicinity Map
NOT TO SCALE

DEVELOPMENT DATA BLOCK

OWNER/DEVELOPER:	BUNCOMBE COUNTY
CONTACT:	RONNIE LUNSFORD
PHONE:	828.450.8317
ADDRESS:	175 BINGHAM ROAD ASHEVILLE, NORTH CAROLINA 28806
PIN:	9617-76-0192, 9617-76-4038, 9617-75-0217
PHYSICAL ADDRESS:	68 APAC DRIVE ASHEVILLE, NORTH CAROLINA 28806
PROPERTY SIZE:	55.74 AC.
ZONING DISTRICT:	PUBLIC SERVICE DIST. (PS)

Davis CivilSolutions, PA
Site/Infrastructure Engineering/Planning
135-A Charlotte Highway • Asheville, North Carolina 28803
828.299.9449 PH • www.daviscivilsolutions.com

PRELIMINARY NOT FOR CONSTRUCTION

Site Plan & Waterline Extension For BUNCOMBE COUNTY SPORTS PARK
68 APAC DRIVE
ASHEVILLE, NORTH CAROLINA

Job No.: 23117
Date: November 15, 2023
Scale: 1"=50'
Revision:

Utilities

Sheet
C4

Davis CivilSolutions, PA
Site/Infrastructure Engineering/Planning
135-A Charlotte Highway • Asheville, North Carolina 28803
828-299-9449 PH • www.daviscivilsolutions.com

PRELIMINARY
NOT FOR
CONSTRUCTION

Site Plan & Waterline Extension For
BUNCOMBE COUNTY SPORTS PARK
68 APAC DRIVE
ASHEVILLE, NORTH CAROLINA

Job No.: 23117
Date: 09 November 15, 2023
Scale: 1" = 10'
Revision:

Utilities - Enlarged Detail

Sheet
C4A

GENERAL NOTES FOR WATER (CITY OF ASHEVILLE)

1. WATER LINE CONSTRUCTION ON THIS SITE IS AUTHORIZED BY PERMITS ISSUED BY THE NORTH CAROLINA DEPARTMENT OF ENVIRONMENT AND NATURAL RESOURCES (NCDENR), AND THE CITY OF ASHEVILLE. THE WORK IS SUBJECT TO INSPECTIONS AT ALL TIMES BY REPRESENTATIVES OF NCDENR, THE OWNER, THE CITY OF ASHEVILLE, OR THE ENGINEER. THE PERMITS REQUIRE CERTIFICATIONS OF COMPLETION OF THE WATER SYSTEMS BY THE CONTRACTOR, THE OWNER, AND THE ENGINEER PRIOR TO ISSUANCE OF FINAL OPERATION APPROVAL BY NCDENR.
2. THE CONTRACTOR SHALL VERIFY THE EXACT LOCATION AND ELEVATION FOR ALL UTILITIES, DRAINAGE AND OTHER UNDERGROUND FACILITIES BOTH EXISTING AND PROPOSED, AND SHALL NOTIFY THE ENGINEER OF ANY DISCREPANCIES OR CONFLICTS, PRIOR TO CONSTRUCTION.
3. FERROUS PIPING FOR BOTH WATER AND SEWER SHALL BE INSTALLED WITHIN 10 FT. OF A CROSSING IF:
   A. A SEWER LINE CROSSES OVER A WATER LINE, OR
   B. THE VERTICAL CLEARANCE BETWEEN WATER AND SEWER LINES IS LESS THAN 18 INCHES.
4. A HORIZONTAL SEPARATION OF TEN (10) FEET SHALL BE MAINTAINED BETWEEN SEWER AND WATER LINES UNLESS LAID IN SEPARATE TRENCHES WITH THE BOTTOM OF THE WATER LINE AT LEAST 18 INCHES ABOVE THE TOP OF THE SEWER LINE, AND FERROUS MATERIAL USED FOR BOTH WATER AND SEWER.
5. A VERTICAL SEPARATION OF TWELVE (12) INCHES SHALL BE MAINTAINED BETWEEN STORM DRAIN AND WATER LINES.
6. THE CONTRACTOR SHALL COORDINATE EXACT LOCATIONS OF VAULTS, METERS, BACKFLOW PREVENTION DEVICES, AND SERVICE LINES WITH THE DETAILED ARCHITECTURAL, PLUMBING, LANDSCAPING PLANS, AND CIVIL SITE PLANS.
7. ALL WATER LINES SHALL HAVE THREE (3) FEET MINIMUM COVER AND SHALL BE CONSTRUCTED OF A FERROUS MATERIAL.
8. ALL MATERIALS AND INSTALLATION PROCEDURES FOR WATER LINES AND APPURTENANCES SHALL CONFORM TO CITY OF ASHEVILLE STANDARD SPECIFICATIONS AND WATER RESOURCES DESIGN & CONSTRUCTION MANUAL, UNDER THE INSPECTION OF THE CITY OF ASHEVILLE AND SHALL BE INSTALLED BY A NORTH CAROLINA LICENSED UTILITY CONTRACTOR. UPON COMPLETION AND ACCEPTANCE, WATER LINES SHALL BE MAINTAINED BY THE CITY OF ASHEVILLE WHERE INDICATED ON THE DRAWINGS.
9. THE CONTRACTOR SHALL PROTECT EXISTING UTILITIES DURING CONSTRUCTION. REPAIRS SHALL BE MADE IN ACCORDANCE WITH APPLICABLE STANDARDS OF APPROPRIATE AGENCIES AT THE CONTRACTOR'S EXPENSE.
10. THE CONTRACTOR SHALL NOTIFY N.C. ONE-CALL CENTER & APPROPRIATE UTILITY AGENCIES PRIOR TO PERFORMING ANY WORK.
11. ALL WATER METERS MUST BE PLACED IN FRONT OF THE DWELLING WHICH THEY SERVE, OUTSIDE DRIVEWAYS AND LOCATED IN RELATIVELY FLAT AREAS, NOT STEEP BANKS OR SLOPES, AT A MAXIMUM OF FIVE (5) FEET OFF OF THE BACK OF CURB OR EDGE OF PAVEMENT. IN AREAS WHERE GRADING MAY PRESENT A CONFLICT WITH THIS REQUIREMENT, ALL WATER METERS MUST BE INSTALLED WITHIN THE ROAD RIGHT-OF-WAY LINE, UPON APPROVAL BY CITY OF ASHEVILLE AND THE ENGINEER. IN CASES WHERE MULTIPLE METERS ARE INSTALLED TO SERVE CONNECTED SINGLE FAMILY HOUSING UNITS, ALL METERS MUST BE TAGGED WITH BRASS PLATES INSIDE THE METER BOX LABELED WITH THE UNIT NUMBER OR ADDRESS CORRESPONDING TO THAT METER.
12. A TWO TO THREE FOOT MINIMUM SEPARATION BETWEEN THE BACK OF CURB/EDGE OF PAVEMENT AND THE WATER LINES IS REQUIRED. WATER LINE SHALL BE LOCATED ON A MINIMUM 5-FOOT SHOULDER OR BANK AND AWAY FROM DITCHES OR STEEP SLOPES.
13. ALL WATER METER FITTINGS, VALVES, AND OTHER APPURTENANCES SHALL BE LEAD FREE MATERIALS.
14. THE CONTRACTOR SHALL PROVIDE EROSION CONTROL MEASURES TO CONTROL RUNOFF FROM THE CONSTRUCTION SITE. THE CONTRACTOR SHALL BE RESPONSIBLE FOR ANY FINES THAT MAY BE LEVIED DUE TO OFFSITE SEDIMENTATION CREATED DURING CONSTRUCTION.
15. THE CONTRACTOR SHALL BE RESPONSIBLE FOR ANY DAMAGE TO EXISTING ROADS DURING CONSTRUCTION AND SHALL REPAIR ROADS IN ACCORDANCE WITH THE REQUIREMENTS OF THE CITY OF ASHEVILLE AND/OR THE NORTH CAROLINA DEPARTMENT OF TRANSPORTATION (AS APPLICABLE FOR JURISDICTION). OPEN-CUT ON ROADWAYS SHALL BE ALLOWED EXCEPT WHERE INDICATED ON THE DRAWINGS OR WHERE SPECIFIC PERMISSION MUST BE GRANTED BY THE CITY OF ASHEVILLE. SAND OR SIMILAR MATERIAL APPROVED BY THE CITY OF ASHEVILLE SHALL BE PLACED AS A PROTECTIVE BARRIER BETWEEN TRACK EQUIPMENT AND THE ROAD AND CLEANED UP PROPERLY AFTER CONSTRUCTION.
16. THE DRAIN FROM THE METER VAULT SHALL DISCHARGE TO DAYLIGHT, OR TO AN ADJACENT STORM WATER STRUCTURE. THE DISCHARGE END SHALL HAVE A FLAP VALVE AT END OF THE PIPE.
17. THE BUILDING SPRINKLER CONTRACTOR SHALL PROVIDE BUILDING SYSTEM CERTIFICATION TO THE CITY OF ASHEVILLE AND GAIN PRIOR APPROVAL FROM THE CITY FOR INSTALLATION OF ANY BACKFLOW PREVENTION DEVICE THAT DIFFERS FROM THOSE FOUND IN THE CITY OF ASHEVILLE TECHNICAL SPECIFICATIONS MANUAL.

NOTE-9

GENERAL NOTES FOR WATER (CITY OF ASHEVILLE) CONT'D

18. BACKFLOW PREVENTION ASSEMBLIES (WHERE INDICATED ON PLANS):
    A. THE DEDICATED FIRE LINE BACKFLOW PREVENTOR (BFP) SHALL BE SIX (6) INCH REDUCED PRESSURE ZONE (RPZ), WITH BY-PASS DETECTOR ASSEMBLY AND SHALL MEET THE CITY OF ASHEVILLE TECHNICAL SPECIFICATIONS MANUAL FOR APPROVED BFP DEVICES.
    B. THE COMBINATION FIRE/DOMESTIC BACKFLOW PREVENTOR (BFP) SHALL BE SIX (6) INCH REDUCED PRESSURE ZONE (RPZ), WITHOUT BY-PASS DETECTOR ASSEMBLY AND SHALL MEET THE CITY OF ASHEVILLE TECHNICAL SPECIFICATIONS MANUAL FOR APPROVED BFP DEVICES.
    C. ALL ABOVE GROUND BACKFLOW PREVENTER ENCLOSURES SHALL BE HEATED AND UL RATED FOR DAMP LOCATIONS, AND SHALL COMPLY WITH ALL NATIONAL ELECTRIC CODE REQUIREMENTS.
    D. ALL DOMESTIC AND/OR SPRINKLER BACKFLOW PREVENTORS (BFP) SHALL BE REDUCED PRESSURE ZONE (RPZ) AND MEET THE CITY OF ASHEVILLE TECHNICAL SPECIFICATIONS MANUAL FOR APPROVED BFP DEVICES.
    E. WHERE A BACKFLOW PREVENTION DEVICE IS INSTALLED INSIDE A BUILDING, AND SPECIFICALLY ALLOWED BY THE DRAWINGS,THE BACKFLOW PREVENTION ROOM SHALL HAVE EXTERIOR ENTRY AND KNOX BOX. A FLOOR DRAIN SHALL BE INSTALLED IN THE ROOM WITH DISCHARGE TO DAYLIGHT. THE TOP OF THE DRAIN SHALL BE LOCATED A MINIMUM OF ONE (1) INCH OR TWO (2) TIMES THE SIZE OF THE DISCHARGE RELIEF OUTLET, WHICHEVER IS GREATER, DIRECTLY BELOW THE RELIEF PORT OF THE BACKFLOW PREVENTOR ASSEMBLY. THE DRAIN PIPE SHALL BE A MINIMUM OF TWO (2) TIMES THE SIZE OF THE RELIEF OUTLET, WHICHEVER IS GREATER. DRAINAGE DESIGN SHALL INCLUDE THE BACKFLOW PREVENTER DISCHARGE.
    F. A PRESSURE REDUCING VALVE SHALL BE INSTALLED PRIOR TO THE BACKFLOW PREVENTOR ASSEMBLY FOR PRESSURES EXCEEDING 175 PSI.
    G. ALL REDUCED PRESSURED ZONE (RPZ) BACKFLOW PREVENTER ASSEMBLIES SHALL HAVE A CHECK VALVE IMMEDIATELY BEFORE THE ASSEMBLY. THE FIRE LINE CHECK VALVE SHALL BE UL/FM RATED.
    H. THE RPZ SHALL BE INSTALLED ON THE FIRE LINE PRIOR TO ANY BRANCHING OF THE PLUMBING LINES.
    I. SUPERVISORY (TAMPER) SWITCHES, AS AN ACCESSORY TO THE BACKFLOW PREVENTER ASSEMBLY, SHALL BE INSTALLED ON BOTH GATE VALVES OF THE ASSEMBLY, AND CONNECTED TO AN AUDIBLE OR VISUAL ALARM, PROVIDED WITH THE SWITCHES.
    J. ALL REDUCED PRESSURE ZONE (RPZ) BACKFLOW PREVENTERS SHALL MEET ASSE 1060 STANDARD REQUIREMENTS, INCLUDING BUT NOT LIMITED TO, WALLS AND STRUCTURES ARE TO BE 10 FEET MINIMUM FROM PROPOSED WATERLINE; GAS, CABLE, AND OTHER UTILITIES ARE TO BE INSTALLED SUCH THAT CLEARANCES FROM THE WATER LINE ARE MAINTAINED OR LOCATED ON THE OPPOSITE SIDE OF THE ROAD.
19. THE 20 FOOT WIDE CITY OF ASHEVILLE WATER LINE EASEMENT SHALL BE KEPT CLEAR OF TREES, SHRUBS, OR ANY PERMANENT TYPE STRUCTURE. TREES ARE TO BE 10 FEET MINIMUM FROM THE PROPOSED WATERLINE.
20. WATER METERS, FIRE HYDRANTS, VAULTS AND BACKFLOW PREVENTER ENCLOSURES SHALL BE LOCATED IN A FLAT AREA OUTSIDE OF PAVEMENT OR DRIVEWAYS.
21. ALL PRIVATE FIRE HYDRANTS SHALL BE PAINTED "FEDERAL RED".
22. SERVICE TAPS ON EXISTING ACTIVE WATER LINES SHALL BE MADE BY THE CITY OF ASHEVILLE WATER RESOURCES DEPARTMENT.
23. CROSS-CONNECTION CONTROL PROTECTION DEVICES ARE REQUIRED BASED ON DEGREE OF HEALTH HAZARD INVOLVED AS LISTED ON APPENDIX-B OF THE RULES GOVERNING PUBLIC WATER SYSTEMS IN NORTH CAROLINA. THESE GUIDELINES ARE THE MINIMUM REQUIREMENTS. THE DEVICES SHALL BE LISTED ON THE UNIVERSITY OF SOUTHERN CALIFORNIA APPROVED ASSEMBLIES. THE DEVICES SHALL BE INSTALLED AND TESTED (BOTH INITIAL AND PERIODIC TESTING THEREAFTER) IN ACCORDANCE WITH THE MANUFACTURER'S RECOMMENDATIONS OR THE LOCAL CROSS-CONNECTION CONTROL PROGRAM, WHICHEVER IS MORE STRINGENT.
24. RESTRAINED JOINTS BY AN APPROVED PIPE MANUFACTURER ARE TO BE USED FOR ALL PUBLIC WATER LINE. THRUST BLOCKS ARE PERMITTED WHERE CONNECTIONS ARE MADE TO EXISTING WATER LINES OR WHERE THE USE OF MECHANICAL RESTRAINT IS NOT FEASIBLE.
25. GAS LINES, CABLE, AND OTHER UTILITIES SHALL BE INSTALLED SUCH THAT CLEARANCES FROM THE WATER LINE ARE MAINTAINED, OR THEY SHALL BE LOCATED ON THE OPPOSITE SIDE OF THE ROAD.
26. NO UNIONS ARE PERMITTED FOR ANY SERVICE LINE BETWEEN THE MAIN AND THE WATER METER. SERVICE LINES MAY NOT EXCEED 60 FEET, AND IS TO RUN PERPENDICULAR TO THE MAIN.

NOTE-9A

SEEDING NOTES

PERMANENT SEEDING

LAWN SEEDING MIXTURE

SPECIES	RATE (LB/ACRE)
KENTUCKY BLUEGRASS (20%) REBEL FESCUE (80%)	260 LBS.

SEEDING DATES

MOUNTAINS — MARCH 15 – MAY 15; AUGUST 15 – OCTOBER 15

SOIL AMENDMENTS

FOLLOW RECOMMENDATIONS OF SOIL TESTS OR APPLY 2,000 LB/ACRE GROUND AGRICULTURAL LIMESTONE AND 750 LB/ACRE 10-10-10 FERTILIZER.

MULCH

APPLY 4,000 LB/ACRE STRAW. ANCHOR STRAW BY TACKING WITH ASPHALT, NETTING, OR A MULCH ANCHORING TOOL. A DISK WITH BLADES SET NEARLY STRAIGHT CAN BE USED AS A MULCH ANCHORING TOOL.

MAINTENANCE

RE-FERTILIZE IF GROWTH IN NOT FULLY ADEQUATE. RE-SEED, RE-FERTILIZE AND MULCH IMMEDIATELY FOLLOWING EROSION OR OTHER DAMAGE.

SLOPE SEEDING MIXTURE

SPECIES	RATE (LB/ACRE)
VALDA HARD FESCUE	20 LBS.
ASTRO TALL FESCUE	8 LBS.
PENLAWN RED FESCUE	25 LBS.
PERENNIAL RYE	25 LBS.
KEN-BLU KENTUCKY BLUEGRASS	1.5 LBS.

SEEDING DATES

MOUNTAINS — MARCH 15 – MAY 15; AUGUST 15 – OCTOBER 15

SOIL AMENDMENTS

FOLLOW RECOMMENDATIONS OF SOIL TESTS OR APPLY 2,000 LB/ACRE GROUND AGRICULTURAL LIMESTONE AND 400 LB/ACRE 18-46-50 FERTILIZER.

MULCH

APPLY 4,000 LB/ACRE STRAW. ANCHOR STRAW BY TACKING WITH ASPHALT.

MAINTENANCE

RE-FERTILIZE IF GROWTH IN NOT FULLY ADEQUATE. RE-SEED, RE-FERTILIZE AND MULCH IMMEDIATELY FOLLOWING EROSION OR OTHER DAMAGE.

TEMPORARY SEEDING FOR SUMMER

SEEDING MIXTURE

SPECIES	RATE (LB/ACRE)
GERMAN MILLET	40 LBS.

SEEDING DATES

MOUNTAINS	MAY 15 – AUGUST 15
PIEDMONT	MAY 1 – AUGUST 15
COASTAL PLAIN	APRIL 15 – AUGUST 15

SOIL AMENDMENTS

FOLLOW RECOMMENDATIONS OF SOIL TESTS OR APPLY 2,000 LB/ACRE GROUND AGRICULTURAL LIMESTONE AND 750 LB/ACRE 10-10-10 FERTILIZER.

MULCH

APPLY 4,000 LB/ACRE STRAW. ANCHOR STRAW BY TACKING WITH ASPHALT, NETTING, OR A MULCH ANCHORING TOOL. A DISK WITH BLADES SET NEARLY STRAIGHT CAN BE USED AS A MULCH ANCHORING TOOL.

MAINTENANCE

RE-FERTILIZE IF GROWTH IN NOT FULLY ADEQUATE. RE-SEED, RE-FERTILIZE AND MULCH IMMEDIATELY FOLLOWING EROSION OR OTHER DAMAGE.

NOTE-14

SEEDING NOTES

TEMPORARY SEEDING FOR FALL

SEEDING MIXTURE

SPECIES	RATE (LB/ACRE)
RYE (GRAIN)	260 LBS.

SEEDING DATES

MOUNTAINS	AUGUST 15 – DECEMBER 15
PIEDMONT	AUGUST 15 – DECEMBER 15
COASTAL PLAIN	AUGUST 15 – DECEMBER 30

SOIL AMENDMENTS

FOLLOW RECOMMENDATIONS OF SOIL TESTS OR APPLY 2,000 LB/ACRE GROUND AGRICULTURAL LIMESTONE AND 1,000 LB/ACRE 10-10-10 FERTILIZER.

MULCH

APPLY 4,000 LB/ACRE STRAW. ANCHOR STRAW BY TACKING WITH ASPHALT, NETTING, OR A MULCH ANCHORING TOOL. A DISK WITH BLADES SET NEARLY STRAIGHT CAN BE USED AS A MULCH ANCHORING TOOL.

MAINTENANCE

REPAIR AND RE-FERTILIZE DAMAGED AREAS IMMEDIATELY. TOPDRESS WITH 50 LB/ACRE NITROGEN IN MARCH. IF IT IS NECESSARY TO EXTEND TEMPORARY COVER BEYOND JUNE 15, OVERSEED WITH 50 LB/ACRE SWITCHGRASS (PANICUM VIRGATUM) IN LATE FEBRUARY OR EARLY MARCH.

TEMPORARY SEEDING FOR WINTER & EARLY SPRING

SEEDING MIXTURE

SPECIES	RATE (LB/ACRE)
RYE (GRAIN)	120 LBS.
SWITCHGRASS (PANICUM VIRGATUM)	50 LBS.

SEEDING DATES

MOUNTAINS (ABOVE 2,500')	FEBRUARY 15 – MAY 15
MOUNTAINS (BELOW 2,500')	FEBRUARY 1 – MAY 1
PIEDMONT	JANUARY 1 – MAY 1
COASTAL PLAIN	DECEMBER 1 – APRIL 15

SOIL AMENDMENTS

FOLLOW RECOMMENDATIONS OF SOIL TESTS OR APPLY 2,000 LB/ACRE GROUND AGRICULTURAL LIMESTONE AND 750 LB/ACRE 10-10-10 FERTILIZER.

MULCH

APPLY 4,000 LB/ACRE STRAW. ANCHOR STRAW BY TACKING WITH ASPHALT, NETTING, OR A MULCH ANCHORING TOOL. A DISK WITH BLADES SET NEARLY STRAIGHT CAN BE USED AS A MULCH ANCHORING TOOL.

MAINTENANCE

RE-FERTILIZE IF GROWTH IN NOT FULLY ADEQUATE. RE-SEED, RE-FERTILIZE AND MULCH IMMEDIATELY FOLLOWING EROSION OR OTHER DAMAGE.

NOTE-15

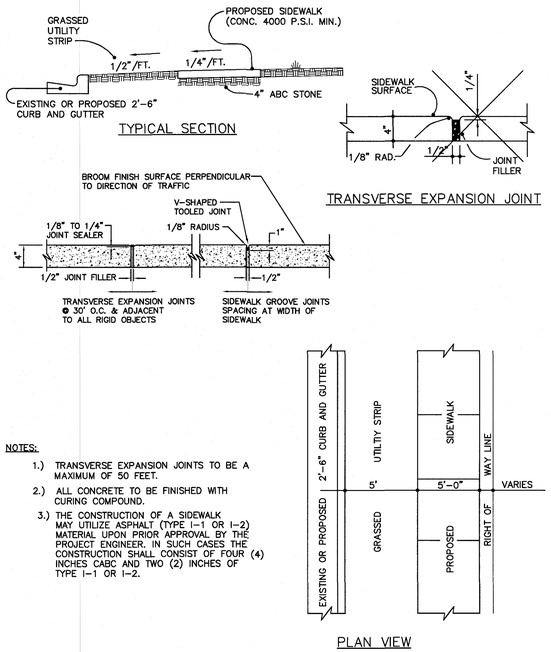

STANDARD SIDEWALK

NOT TO SCALE

ST-36

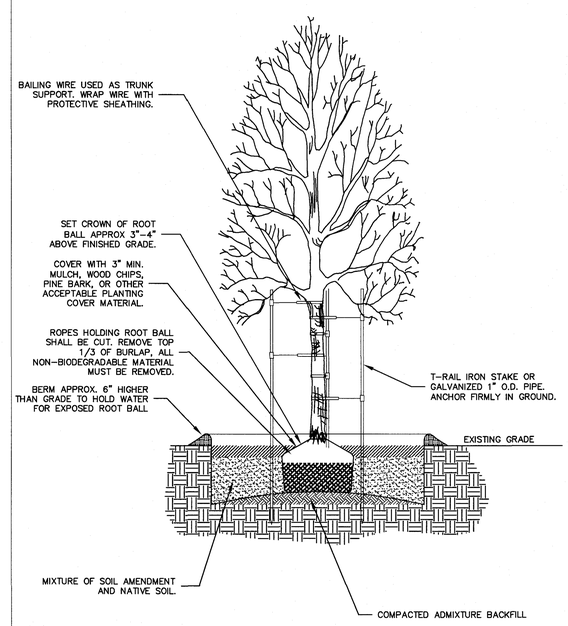

STANDARD TREE PROTECTION

NOT TO SCALE

ST-43

Davis CivilSolutions, PA
Site/Infrastructure Engineering/Planning
115-A Charlotte Highway Asheville, North Carolina 28803
828-299-9449 PH • www.daviscivilsolutions.com

NORTH CAROLINA PROFESSIONAL ENGINEER SEAL 053123

PRELIMINARY NOT FOR CONSTRUCTION

Site Plan & Waterline Extension For BUNCOMBE COUNTY SPORTS PARK 68 APAC DRIVE

ASHEVILLE, NORTH CAROLINA

Job No.: 23117
Date: November 15, 2023
Scale: NTS
Revision:

Details

Sheet D1

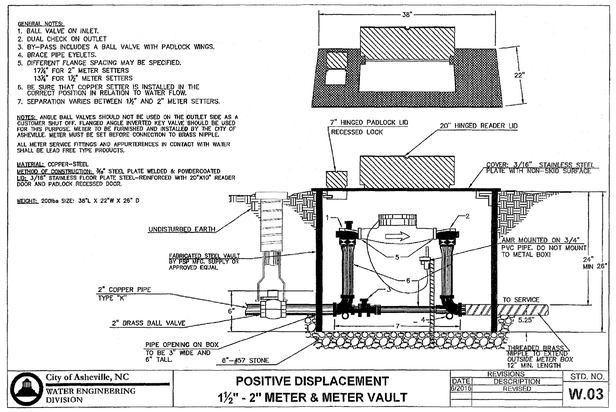

City of Asheville, NC
WATER ENGINEERING DIVISION

POSITIVE DISPLACEMENT 1½" - 2" METER & METER VAULT

REVISIONS			STD. NO.
DATE	DESCRIPTION		
6/2015	REVISED		W.03

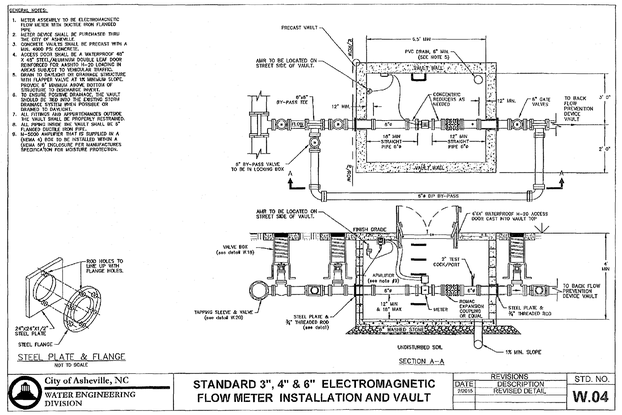

City of Asheville, NC
WATER ENGINEERING DIVISION

STANDARD 3", 4" & 6" ELECTROMAGNETIC FLOW METER INSTALLATION AND VAULT

REVISIONS			STD. NO.
DATE	DESCRIPTION		
7/2015	REVISED DETAIL		W.04

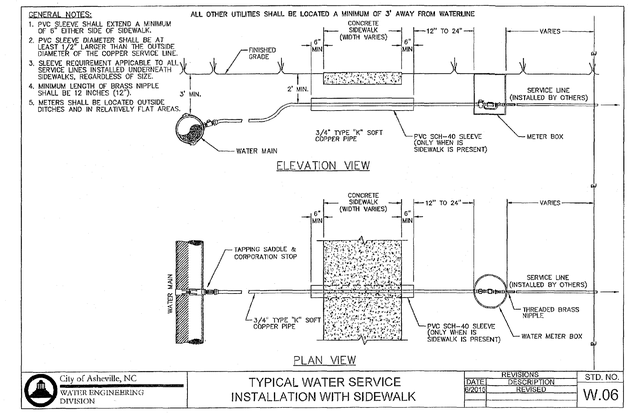

City of Asheville, NC
WATER ENGINEERING DIVISION

TYPICAL WATER SERVICE INSTALLATION WITH SIDEWALK

REVISIONS			STD. NO.
DATE	DESCRIPTION		
6/2010	REVISED		W.06

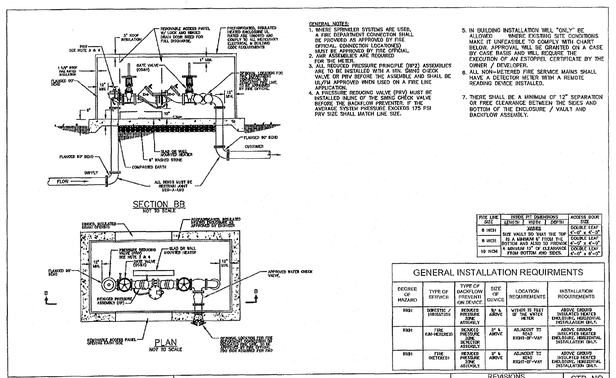

City of Asheville, NC
WATER ENGINEERING DIVISION

ABOVE GROUND BACKFLOW / ENCLOSURE

REVISIONS			STD. NO.
DATE	DESCRIPTION		
6/2015	Revision		W.08

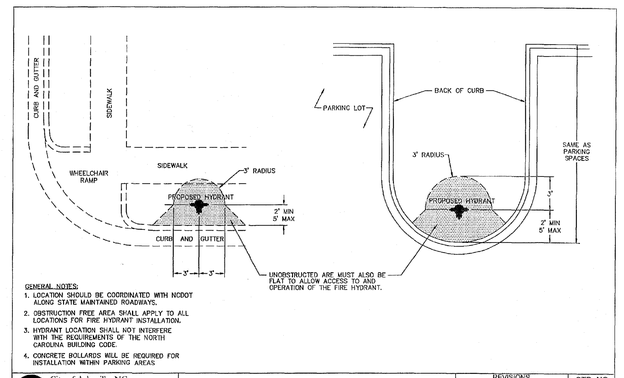

City of Asheville, NC
WATER ENGINEERING DIVISION

STANDARD HYDRANT LOCATION

REVISIONS			STD. NO.
DATE	DESCRIPTION		
6/2015	REVISED		W.15

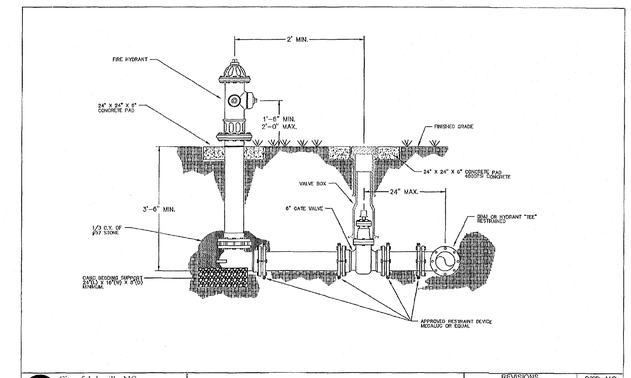

City of Asheville, NC
WATER ENGINEERING DIVISION

FIRE HYDRANT INSTALLATION

REVISIONS			STD. NO.
DATE	DESCRIPTION		
6/2015	REVISED		W.16

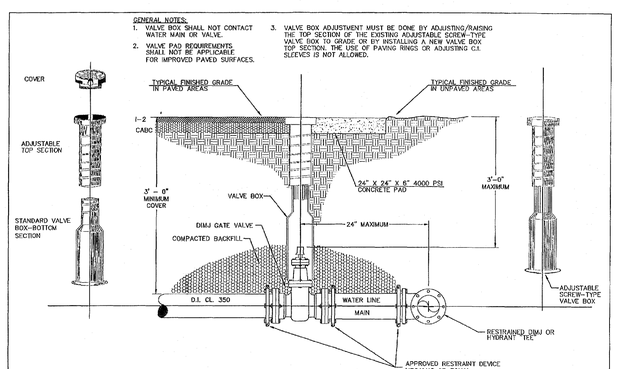

City of Asheville, NC
WATER ENGINEERING DIVISION

TYPICAL VALVE & VALVE BOX INSTALLATION / ADJUSTMENT

REVISIONS			STD. NO.
DATE	DESCRIPTION		
6/2015	REVISED		W.18

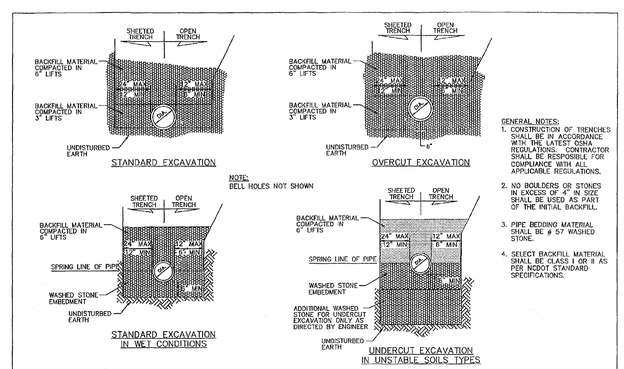

City of Asheville, NC
WATER ENGINEERING DIVISION

TYPICAL TRENCH DETAIL

REVISIONS			STD. NO.
DATE	DESCRIPTION		
6/2015	REVISED		W.21

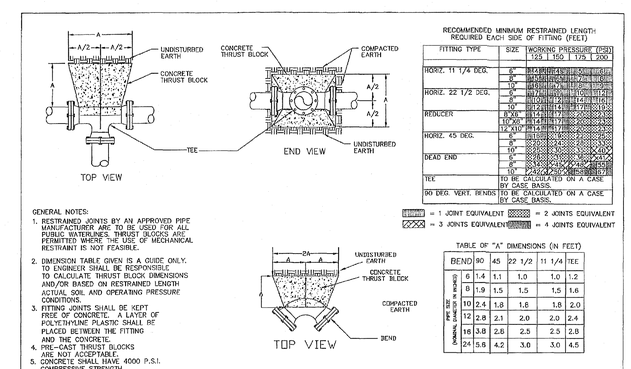

City of Asheville, NC
WATER ENGINEERING DIVISION

THRUST BLOCK FOR FITTINGS & RESTRAINING REQUIREMENTS

REVISIONS			STD. NO.
DATE	DESCRIPTION		
6/2015	REVISED		W.22

Davis CivilSolutions, PA
Site/Infrastructure Engineering/Planning
1035 Hendersonville Rd. Asheville, North Carolina 28803
828.299.9449 PH • www.daviscivilsolutions.com

PRELIMINARY NOT FOR CONSTRUCTION

Site Plan & Waterline Extension For BUNCOMBE COUNTY SPORTS PARK
68 APAC DRIVE
ASHEVILLE, NORTH CAROLINA

Job No.: 23117
Date: November 15, 2023
Scale: NTS
Revision:

Details

Sheet
D2

GENERAL NOTES

1. ALL FITTINGS MUST BE RESTRAINED AS SPECIFIED IN THE STANDARD SPECIFICATIONS AND DETAILS MANUAL.
2. DIMENSION TABLE GIVEN IS A GUIDE ONLY. ENGINEER SHALL BE RESPONSIBLE TO CALCULATE THRUST BLOCK DIMENSIONS BASED ON ACTUAL SOIL AND OPERATING
3. FITTING JOINTS SHALL BE KEPT FREE OF CONCRETE. A LAYER OF POLYETHYLENE PLASTIC SHALL BE PLACED BETWEEN THE FITTING AND THE CONCRETE.
4. CONTRACTOR HAS THE OPTION TO RESTRAIN PIPE JOINTS IN LIEU OF CONCRETE DEADMAN & RODDING.

	PIPE SIZE (NOMINAL DIAMETER IN INCHES)						
	6	8	10	12	16	24	
"A" DIMEN. IN FEET	1.2	1.6	2.0	2.4	2.8	4.5	

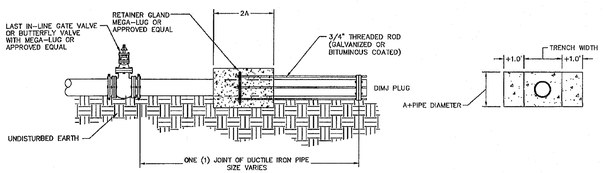

SIDE VIEW

END VIEW

City of Asheville, NC
WATER ENGINEERING DIVISION

END OF LINE PLUG

REVISIONS		STD. NO.
DATE	DESCRIPTION	
6/2015	REVISED	W.23

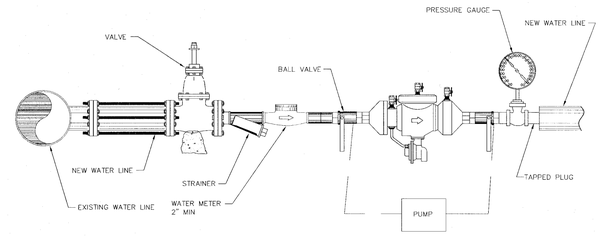

GENERAL NOTES:

1. PRIOR TO CONNECTING TO THE EXISTING WATERLINE, THE NEW WATER LINE WILL BE PRESSURE TESTED, DISINFECTED AND A CLEAR WATER SAMPLE OBTAINED.
2. ALL WATER FOR FILLING AND FLUSHING OF NEW WATER LINE WILL BE DRAWN THROUGH THE REDUCED PRESSURE ZONE (RPZ) ASSEMBLY.
3. THE COSTS FOR PROVIDING REDUCED PRESSURE ZONE (RPZ) ASSEMBLY AND SLEEVE NECESSARY FOR FINAL CONNECTION WILL BE INCIDENTAL TO THE WATER LINE INSTALLATION.
4. THE BOTTOM OF THE REDUCED PRESSURE ZONE (RPZ) ASSEMBLY TO BE INSTALLED MINIMUM 12" FROM THE GROUND. ALL DISCHARGE MUST DRAIN AWAY FROM ASSEMBLY. CONTRACTOR IS RESPONSIBLE FOR PROTECTING REDUCED PRESSURE ZONE ASSEMBLY FROM FREEZING.
5. A PRV MUST BE INSTALLED BEFORE THE REDUCED PRESSURE ZONE (RPZ) ASSEMBLY IF THE PRESSURE IS GREATER THAN 175 PSI.

City of Asheville, NC
WATER ENGINEERING DIVISION

NEW WATER LINE PRESSURE TEST BACKFLOW PREVENTION ASSEMBLY

REVISIONS		STD. NO.
DATE	DESCRIPTION	
1/2023	REVISED DETAIL FROM 6.21	W.28

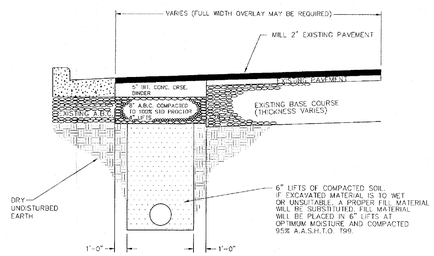

NOTE:

1. EDGES TO BE SAWED WITH A CONCRETE SAW TO A NEAT SQUARED EDGE BROOMED CLEAN OF DUST AND DRY BEFORE TACK COAT IS APPLIED.
2. EDGES AND OVERLAY AREAS TO BE TACKED WITH CRS-1OR CRD-2.
3. 6" LIFTS OR SUITABLE SOIL OR ABC AT OPTIMUM MOISTURE COMPACTED 100% A.A.S.H.T.O. T99. ALL WET OR UNSUITABLE MATERIAL TO BE REMOVED FROM SITE PRIOR TO BACKFILL.
4. N.C.D.O.T. APPROVED PATCH DETAIL.
5. ALL O.S.H.A. REQUIREMENTS SHALL BE ADHERED TO FOR TRENCHING OPERATIONS.

City of Asheville, NC
Standard Specifications and Details Manual

PAVEMENT REMOVAL AND REPLACEMENT

REVISIONS		STD. NO.
DATE	DESCRIPTION	
		5.01

NOTE:

1. EDGES TO BE SAWED WITH A CONCRETE SAW TO A NEAT SQUARED EDGE BROOMED CLEAN OF DUST BEFORE TACK COAT IS APPLIED.

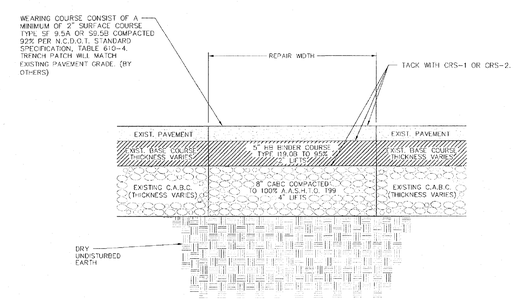

City of Asheville, NC
Standard Specifications and Details Manual

ROAD PAVEMENT REPAIR

REVISIONS		STD. NO.
DATE	DESCRIPTION	
		5.10

Davis CivilSolutions, PA
Site/Infrastructure Engineering/Planning
135-A Charlotte Highway • Asheville, North Carolina 28803
828.299.9449 PH • www.daviscivilsolutions.com

11/17/23

PRELIMINARY NOT FOR CONSTRUCTION

Site Plan & Waterline Extension For
BUNCOMBE COUNTY SPORTS PARK
68 APAC DRIVE
ASHEVILLE, NORTH CAROLINA

Job No.: 23117
Date: November 15, 2023
Scale: NTS
Revision:

Details

Sheet
D3

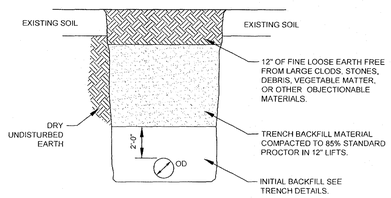

TRENCH BACKFILL IN MSD RIGHTS OF WAY
N.T.S.

STANDARD DETAIL
Metropolitan Sewerage District
of Buncombe County, North Carolina
TRENCH BACKFILL
DATE APPROVED: MARCH 2017 | 1.16 - 01

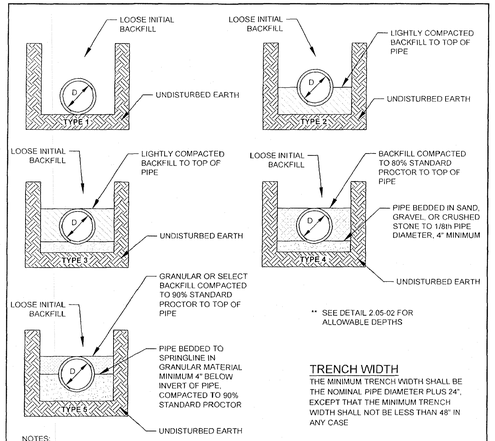

** SEE DETAIL 2.05-02 FOR ALLOWABLE DEPTHS

TRENCH WIDTH
THE MINIMUM TRENCH WIDTH SHALL BE THE NOMINAL PIPE DIAMETER PLUS 24", EXCEPT THAT THE MINIMUM TRENCH WIDTH SHALL NOT BE LESS THAN 48" IN ANY CASE

NOTES:

1. MINIMUM ALLOWABLE DEPTH OF COVER IS 3 FT.
2. IN ROCK OR WET SOIL, PIPE MUST BE BEDDED IN AT LEAST 6" OF CRUSHED STONED EMBEDMENT MATERIAL BELOW THE INVERT OF THE PIPE.
3. GRANULAR MATERIALS ARE DEFINED PER THE AASHTO SOIL CLASSIFICATION SYSTEM (ASTM03282) OR THE UNIFIED SOIL CLASSIFICATION SYSTEM (ASTM 02487), WITH THE EXCEPTION THAT GRAVEL BEDDING/BACKFILL ADJACENT TO THE PIPE IS LIMITED TO 2" MAXIMUM PARTICLE SIZE PER ANSI/AWWA C600
4. THESE PIPES ARE ADEQUATE FOR DEPTHS OF COVER FROM 3 FT. UP TO THE MAXIMUM SHOWN INCLUDING AN ALLOWANCE FOR A SINGLE H-20 TRUCK WITH A 1.5 IMPACT FACTOR UNLESS NOTED.
5. RING DEFLECTION LIMITED TO 3%, MINIMUM SAFETY FACTOR OF 2. EARTH LOAD BASED ON SOIL WEIGHT OF 120 PCF.

STANDARD DETAIL
Metropolitan Sewerage District
of Buncombe County, North Carolina
TYPICAL TRENCH DETAIL FOR DUCTILE IRON PIPE - 1
DATE APPROVED: MARCH 2017 | 2.05 - 01

Maximum Depth of Cover for Ductile Iron Pipe w/ Cement Lining

Pipe Size	Class	Type 1	Type 2	Type 3	Type 4	Type 5
4	350	53	61	69	85	100
6	350	26	31	37	47	65
8	350	16	20	25	34	50
10	350	11	15	19	28	45
12	350	10	15	19	28	44
14	250	–	11	15	23	36
14	300	–	13	17	26	42
14	350	–	14	19	27	44
16	250	–	11	15	24	34
16	300	–	13	17	26	39
16	350	–	15	20	28	44
18	250	–	10	14	22	31
18	300	–	13	17	26	36
18	350	–	15	19	28	41
20	250	–	10	14	22	30
20	300	–	13	17	26	35
20	350	–	15	19	28	38
24	200	–	8	12	17	25
24	250	–	11	15	20	29
24	300	–	13	17	24	32
24	350	–	15	19	28	37
30	200	–	8	12	16	24
24	250	–	11	15	19	27
30	300	–	12	16	21	29
30	350	–	15	19	25	33
36	200	–	8	12	15	23
36	250	–	10	14	18	25
36	300	–	12	16	20	28
36	350	–	15	19	24	32
42	200	–	8	12	15	22
42	250	–	10	14	17	25
42	300	–	12	16	20	27
42	350	–	15	19	23	32
48	200	–	8	11	15	22
48	250	–	10	13	17	24
48	300	–	12	15	19	27
48	350	–	15	18	22	30
54	200	–	8	11	14	22
54	250	–	10	13	16	24
54	300	–	13	15	19	27
54	350	–	15	18	22	30
60	200	–	8	11	14	22
60	250	–	10	13	16	24
60	300	–	13	15	19	26
60	350	–	15	18	22	30
64	200	–	8	11	14	21
64	250	–	10	13	16	24
64	300	–	12	15	19	26
64	350	–	15	17	21	29

SOURCE: Ductile Iron Pipe for Wastewater Applications, DIPRA 2006

STANDARD DETAIL
Metropolitan Sewerage District
of Buncombe County, North Carolina
TYPICAL TRENCH DETAIL FOR DUCTILE IRON PIPE - 2
DATE APPROVED: MARCH 2017 | 2.05 - 02

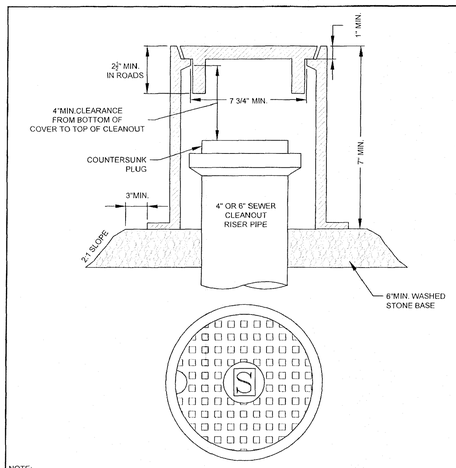

NOTE:

1. ALL SANITARY SEWER CLEANOUT BOXES AND COVERS SHALL BE MANUFACTURED FROM GRAY IRON (CAST IRON) MEETING THE REQUIREMENTS OF AWWA C110 AND ASTM A536.
2. ALL SANITARY SEWER CLEANOUT BOXES AND COVERS SHALL CONFORM TO PARAGRAPH 2.01(d) OF ITEM II, SECTION VI OF MSD's TECHNICAL SPECIFICATIONS (MADE IN THE U.S.A.)
3. NON-TRAFFIC LOCATIONS: SANITARY SEWER CLEANOUT BOXES AND COVERS SHALL BE AS MANUFACTURED BY EAST JORDAN IRON WORKS MODEL 1566 (OR APPROVED EQUAL)
4. TRAFFIC LOCATIONS: SANITARY SEWER CLEANOUT BOXES AND COVERS SHALL BE AS MANUFACTURED BY EAST JORDAN IRON WORKS MODEL 1574 (OR APPROVED EQUAL)

STANDARD DETAIL
Metropolitan Sewerage District
of Buncombe County, North Carolina
CLEANOUT BOX
DATE APPROVED: MARCH 28, 2019 | 2.07 - 05

NOTE: FITTINGS SHALL BE THE SAME MATERIAL AS EXIST. SEWER

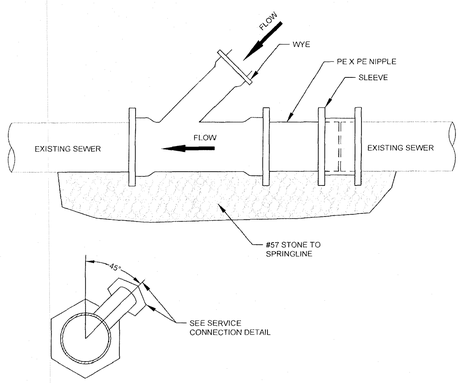

NOT FOR USE ON NEW CONSTRUCTION.

STANDARD DETAIL
Metropolitan Sewerage District
of Buncombe County, North Carolina
SERVICE CONNECTION TO EXISTING SEWER
DATE APPROVED: MARCH 2017 | 2.07 - 01

NOTES:

1. WYE CONNECTIONS ARE STANDARD FOR NEW SEWER MAIN CONSTRUCTION.
2. FORCE MAINS CARRYING DOMESTIC WASTEWATER FROM SANITARY CONVENIENCES WITHIN A SINGLE BUILDING, MAY BE CONNECTED TO A 4" MSD GRAVITY SERVICE LINE PROVIDED THAT GRAVITY FLOW WILL BE MAINTAINED DURING PROPOSED MAXIMUM DISCHARGE RATE FOR THE GRINDER OR EFFLUENT PUMP(S).
3. WHERE COVER IS LESS THAN 3 FT. DUCTILE IRON MUST BE USED.
4. WHERE DUCTILE IRON IS REQUIRED RISER MAY BE CONSTRUCTED WITH SCH. 40 PVC

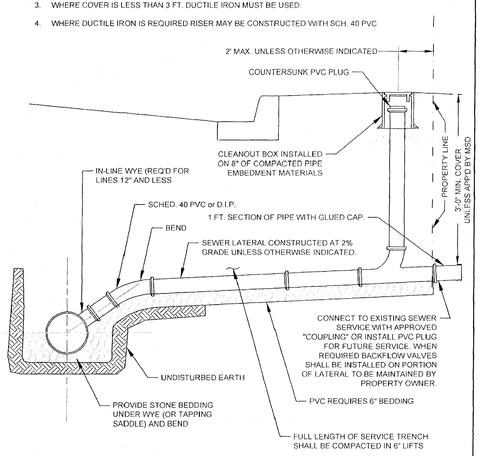

STANDARD DETAIL
Metropolitan Sewerage District
of Buncombe County, North Carolina
SANITARY SEWER SERVICE LESS THAN 5' DEEP
DATE APPROVED: MARCH 2017 | 2.07 - 03

Davis CivilSolutions, PA
Site/Infrastructure Engineering/Planning
P.O. Box 1719 / 1926 Hendersonville Road, Asheville, North Carolina 28803
828-274-0689 PH / www.daviscivilsolutions.com

PRELIMINARY NOT FOR CONSTRUCTION

Site Plan & Waterline Extension For
BUNCOMBE COUNTY SPORTS PARK
68 APAC DRIVE
ASHEVILLE, NORTH CAROLINA

Job No.: 23117
Date: November 15, 2023
Scale: NTS
Revision:

Details

Sheet
D4

NORTH CAROLINA LAND QUALITY SECTION
EROSION CONTROL NOTES

GENERAL: ALL EROSION CONTROL MEASURES ARE TO BE PERFORMED IN STRICT ACCORDANCE WITH REQUIREMENTS OF THE NORTH CAROLINA DEPARTMENT OF ENVIRONMENTAL QUALITY (DEQ), LAND QUALITY SECTION. THE FOLLOWING CONSTRUCTION SHALL BE COMPLIED WITH FOR ALL WORK.

1. – OBTAIN EROSION CONTROL PERMIT.
2. – NOTIFY DEQ WITHIN SEVEN (7) DAYS OF BREAKING GROUND FOR A PRE-DISTURBANCE INSPECTION.
3. – INSTALL ALL EROSION CONTROL MEASURES AS REQUIRED BY THE DEQ, LAND QUALITY SECTION. INSTALL CONSTRUCTION ENTRANCE(S) WITH WASH RACK(S). INSTALL PERMETER SILT FENCE WITH WIRE FENCE (SF), INLET PROTECTIONS (IP), SEDIMENT TRAPS (ST), TREE PROTECTION (TP) AND SAFETY FENCING (SAF) AS ILLUSTRATED ON THE EROSION CONTROL PLANS.
4. – ONCE ALL EROSION CONTROLS ARE ESTABLISHED AND APPROVED BY THE SITE INSPECTOR, BEGIN CLEARING AND STRIPING THE SITE AND TEMPORARILY STOCKPILING IN DESIGNATED LOCATION ON THE EROSION CONTROL PLAN. PROVIDE SILT FENCE WITH WIRE FENCE AROUND TEMPORARY STOCK PILE AND TEMPORARILY SEED STOCKPILE IF LEFT OVER 14 DAYS.
5. – SEED AND MULCH DENUDED AREA WITHIN 14 DAYS ON DISTURBED FLAT AREAS AND 7 DAYS ON ALL PERIMETER DIKES, SWALES, DITCHES, PERIMETER SLOPES AND ALL SLOPES STEEPER THAN 3 HORIZONTAL TO 1 VERTICAL. GROUND COVER SHALL BE REQUIRED AS SOON AS PRACTICABLE BUT IN ANY EVENT WITHIN 14 (OR 7) CALENDAR DAYS FROM THE LAST LAND-DISTURBING ACTIVITY.

SEED AND SOIL AMENDMENTS SHALL BE PLACED ON A PREPARED SEEDBED AT THE FOLLOWING RATES PER ACRE:

SUMMER (PERMANENT) SEEDING (MAY 15 TO AUGUST 15)

LIME	4,000 LBS
FERTILIZER (10-10-10)	1,000 LBS
KY-31 FESCUE	100 LBS
STRAW MULCH	4,000 LBS. (ANCHORED)
GERMAN MILLET	40 LBS. (OR SMALL-STEMMED SUDAN GRASS @ 40 LBS.)

WINTER (TEMPORARY) SEEDING (AUGUST 15 TO MAY 15) MOUNTAINS

LIME	4,000 LBS
FERTILIZER (10-10-10)	1,000 LBS
KY-31 FESCUE	100 LBS
STRAW MULCH	4,000 LBS. (ANCHORED)
RYE (GRAIN)	120 LBS.

FOR ALL SLOPES 2:1 OR STEEPER ADD TO THE ABOVE:

SWITCH GRASS	50 LBS

IF HYDROSEEDING, WOOD CELLULOSE MAY BE USED IN ADDITION TO STRAW MULCH AT THE RATE OF 1,000 LBS PER ACRE. ALL SEEDING SHALL BE MAINTAINED, WATERED, ETC., UNTIL A PERMANENT VEGETATIVE GROUND COVER IS ESTABLISHED OVER ALL DISTURBED AREAS. ALL SLOPES 2:1 OR STEEPER SHALL BE COVERED BY EROSION CONTROL MATTING.

6. – MAINTAIN SOIL EROSION CONTROL MEASURES UNTIL PERMANENT GROUND COVER IS ESTABLISHED.
7. – OBTAIN STABILIZATION INSPECTION FROM DEQ PRIOR TO REMOVAL OF SOIL EROSION CONTROL MEASURES.
8. – REMOVE SOIL EROSION CONTROL MEASURES AND STABILIZE THESE AREAS.
9. – REQUEST FINAL APPROVAL BY THE DEQ, LAND QUALITY SECTION.
10. – EROSION CONTROL IS FIELD PERFORMANCE BASED AND ADDITIONAL SILT FENCES, TEMPORARY SEDIMENT BASINS AND ALL OTHER MEASURES MAY NEED TO BE ADDED IN ADDITION TO THE APPROVED PLAN AS NECESSARY. MEASURES SHOWN CAN AND SHOULD BE ADJUSTED TO ASSURE MAXIMUM PROTECTION OF SITE. 11.–THE CONTRACTOR SHALL MAKE INSPECTIONS OF THE SITE DURING AND AFTER THE INSTALLATION OF EROSION CONTROL FACILITIES; THE COMPLETION OF EACH PHASE OF CLEARING AND GRADING; THE INSTALLATION OF STORM DRAINAGE FACILITIES; THE COMPLETION OF CONSTRUCTION; IMMEDIATELY AFTER EACH RAINFALL EVENT; AND CONTINUALLY UNTIL PERMANENT GROUND COVER IS ESTABLISHED.
11. – THE CONTRACTOR SHALL MAKE INSPECTIONS OF THE SITE ON A DAILY BASIS; DURING AND AFTER; THE INSTALLATION OF EROSION CONTROL FACILITIES; THE COMPLETION OF EACH PHASE OF CLEARING AND GRADING; THE INSTALLATION OF STORM DRAINAGE FACILITIES; THE COMPLETION OF CONSTRUCTION; IMMEDIATELY AFTER EACH RAINFALL EVENT AND CONTINUALLY UNTIL PERMANENT GROUND COVER IS ESTABLISHED.
12. – CONSTRUCTION ENTRANCE SHALL BE CLEANED AS NECESSARY AND CONTRACTOR SHALL WASH ANY PAVED AREAS WHERE SEDIMENT HAS ACCUMULATED TO A APPROVED SEDIMENT CONTROL PRACTICE.
13. – SEDIMENT TO BE REMOVED FROM INLET PROTECTIONS WHEN CAPACITY HAS BEEN APPROXIMATELY 50% FILLED. GRAVEL SHALL BE CLEANED OR REPLACED
14. – REMOVE SEDIMENT FROM BEHIND SILT FENCE (SF) WHEN IT BECOMES APPROXIMATELY 6" DEEP AT THE FENCE. REPAIR SILT FENCE AS NECESSARY TO MAINTAIN STRUCTURAL PRACTICE
15. – THE CONTRACTOR SHALL COMPLY WITH THE REQUIREMENTS OF THE WEEKLY SELF-INSPECTION PROGRAM OF THE NPDES STORMWATER PERMIT FOR CONSTRUCTION ACTIVITIES. THE INSPECTIONS SHOULD BE CONDUCTED AFTER EACH PHASE OF THE PROJECT, AND CONTINUED UNTIL PERMANENT GROUND COVER IS ESTABLISHED. THE NPDES SELF-INSPECTION REPORT FORM FROM THE DEQ, DIVISION OF LAND RESOURCES SHALL BE USED AND ALL REPORTING REQUIREMENTS SHALL BE FOLLOWED. INSPECTION ITEMS INCLUDE, BUT IS NOT LIMITED TO, SEDIMENT CONTROL BASINS, TRAPS, AND PONDS, ROCK DAMS, TEMPORARY DIVERSIONS, TEMPORARY SLOPE DRAINS, ROCK CHECK DAMS, SILT FENCE, INLET PROTECTION, STORM DRAIN FACILITIES, ENERGY DISSAPATERS, AND STABILIZATION METHODS OF OPEN CHANNELS, AND THE NEED FOR GROUND COVER.

A. SEE ITEM "NOTE-5A" DETAIL FOR A COMPLETE LISTING OF SELF INSPECTION REQUIREMENTS.
B. STATE ISSUED INSPECTION AND SELF MONITORING FORMS ARE AVAILABLE ON-LINE, OR CAN BE PROVIDED BY THE ENGINEER'S OFFICE UPON REQUEST.

NOTE-5

NORTH CAROLINA LAND QUALITY SECTION
EROSION CONTROL NOTES CONT'D

THE INFORMATION BELOW TAKEN FROM NCDEQ SELF INSPECTION REQUIREMENTS AND CAN BE FOUND AT:
http://www.deq.nc.gov – See Section 15A NCAC 04B .0131 SELF-INSPECTIONS

15A NCAC 04B .0131 SELF-INSPECTIONS

WHERE INSPECTIONS ARE REQUIRED BY G.S. 113A-54.1(E), THE FOLLOWING APPLY:

(1) THE PERSON WHO PERFORMS THE INSPECTION SHALL MAKE A RECORD OF THE SITE INSPECTION BY DOCUMENTING THE FOLLOWING ITEMS:

(a) ALL OF THE EROSION AND SEDIMENTATION CONTROL MEASURES, PRACTICES AND DEVICES, AS CALLED FOR IN A CONSTRUCTION SEQUENCE CONSISTENT WITH THE APPROVED EROSION AND SEDIMENTATION CONTROL PLAN, INCLUDING BUT NOT LIMITED TO SEDIMENTATION CONTROL BASINS, SEDIMENTATION TRAPS, SEDIMENTATION PONDS, ROCK DAMS, TEMPORARY DIVERSIONS, TEMPORARY SLOPE DRAINS, ROCK CHECK DAMS, SEDIMENT FENCE OR BARRIERS, ALL FORMS OF INLET PROTECTION, STORM DRAINAGE FACILITIES, ENERGY DISSIPATERS, AND STABILIZATION METHODS OF OPEN CHANNELS, HAVE INITIALLY BEEN INSTALLED AND DO NOT SIGNIFICANTLY DEVIATE (AS DEFINED IN SUB-ITEM (1)(E) OF THIS RULE) FROM THE LOCATIONS, DIMENSIONS AND RELATIVE ELEVATIONS SHOWN ON THE APPROVED EROSION AND SEDIMENTATION PLAN. SUCH DOCUMENTATION SHALL BE ACCOMPLISHED BY INITIALING AND DATING EACH MEASURE OR PRACTICE SHOWN ON A COPY OF THE APPROVED EROSION AND SEDIMENTATION CONTROL PLAN OR BY COMPLETING, DATING AND SIGNING AN INSPECTION REPORT THAT LISTS EACH MEASURE, PRACTICE OR DEVICE SHOWN ON THE APPROVED EROSION AND SEDIMENTATION CONTROL PLAN. THIS DOCUMENTATION IS REQUIRED ONLY UPON THE INITIAL INSTALLATION OF THE EROSION AND SEDIMENTATION CONTROL MEASURES, PRACTICES AND DEVICES AS SET FORTH BY THE APPROVED EROSION AND SEDIMENTATION CONTROL PLAN OR IF THE MEASURES, PRACTICES AND DEVICES ARE MODIFIED AFTER INITIAL INSTALLATION;

(b) THE COMPLETION OF ANY PHASE OF GRADING FOR ALL GRADED SLOPES AND FILLS SHOWN ON THE APPROVED EROSION AND SEDIMENTATION CONTROL PLAN, SPECIFICALLY NOTING THE LOCATION AND CONDITION OF THE GRADED SLOPES AND FILLS. SUCH DOCUMENTATION SHALL BE ACCOMPLISHED BY INITIALING AND DATING A COPY OF THE APPROVED EROSION AND SEDIMENTATION CONTROL PLAN OR BY COMPLETING, DATING AND SIGNING AN INSPECTION REPORT;

(c) THE LOCATION OF TEMPORARY OR PERMANENT GROUND COVER, AND THAT THE INSTALLATION OF THE GROUND COVER DOES NOT SIGNIFICANTLY DEVIATE (AS DEFINED IN SUB-ITEM (1)(E) OF THIS RULE) FROM THE APPROVED EROSION AND SEDIMENTATION CONTROL PLAN. SUCH DOCUMENTATION SHALL BE ACCOMPLISHED BY INITIALING AND DATING A COPY OF THE APPROVED EROSION AND SEDIMENTATION CONTROL PLAN OR BY COMPLETING, DATING AND SIGNING AN INSPECTION REPORT;

(d) THAT MAINTENANCE AND REPAIR REQUIREMENTS FOR ALL TEMPORARY AND PERMANENT EROSION AND SEDIMENTATION CONTROL MEASURES, PRACTICES AND DEVICES HAVE BEEN PERFORMED. SUCH DOCUMENTATION SHALL BE ACCOMPLISHED BY COMPLETING, DATING AND SIGNING AN INSPECTION REPORT (THE GENERAL STORM WATER PERMIT MONITORING FORM MAY BE USED TO VERIFY THE MAINTENANCE AND REPAIR REQUIREMENTS); AND

(e) ANY SIGNIFICANT DEVIATIONS FROM THE APPROVED EROSION AND SEDIMENTATION CONTROL PLAN, CORRECTIVE ACTIONS REQUIRED TO CORRECT THE DEVIATION AND COMPLETION OF THE CORRECTIVE ACTIONS. SUCH DOCUMENTATION SHALL BE ACCOMPLISHED BY INITIALING AND DATING A COPY OF THE APPROVED EROSION AND SEDIMENTATION CONTROL PLAN OR BY COMPLETING, DATING AND SIGNING AN INSPECTION REPORT. A SIGNIFICANT DEVIATION MEANS AN OMISSION, ALTERATION OR RELOCATION OF AN EROSION OR SEDIMENTATION CONTROL MEASURE THAT PREVENTS THE MEASURE FROM PERFORMING AS INTENDED.

(2) THE DOCUMENTATION, WHETHER ON A COPY OF THE APPROVED EROSION AND SEDIMENTATION CONTROL PLAN OR AN INSPECTION REPORT, SHALL INCLUDE THE NAME, ADDRESS, AFFILIATION, TELEPHONE NUMBER, AND SIGNATURE OF THE PERSON CONDUCTING THE INSPECTION AND THE DATE OF THE INSPECTION. ANY RELEVANT LICENSES AND CERTIFICATIONS MAY ALSO BE INCLUDED. ANY DOCUMENTATION OF INSPECTIONS THAT OCCUR ON A COPY OF THE APPROVED EROSION AND SEDIMENTATION CONTROL PLAN SHALL OCCUR ON A SINGLE COPY OF THE PLAN AND THAT PLAN SHALL BE MADE AVAILABLE ON THE SITE. ANY INSPECTION REPORTS SHALL ALSO BE MADE AVAILABLE ON THE SITE.

(3) THE INSPECTION SHALL BE PERFORMED DURING OR AFTER EACH OF THE FOLLOWING PHASES OF A PLAN:

(a) INSTALLATION OF PERIMETER EROSION AND SEDIMENT CONTROL MEASURES;

(b) CLEARING AND GRUBBING OF EXISTING GROUND COVER;

(c) COMPLETION OF ANY PHASE OF GRADING OF SLOPES OR FILLS THAT REQUIRES PROVISION OF TEMPORARY OR PERMANENT GROUND COVER PURSUANT TO G.S. 113A-57(2);

(d) COMPLETION OF STORM DRAINAGE FACILITIES;

(e) COMPLETION OF CONSTRUCTION OR DEVELOPMENT; AND

(f) QUARTERLY UNTIL THE ESTABLISHMENT OF PERMANENT GROUND COVER SUFFICIENT TO RESTRAIN EROSION OR UNTIL THE FINANCIALLY RESPONSIBLE PARTY HAS CONVEYED OWNERSHIP OR CONTROL OF THE TRACT OF LAND FOR WHICH THE EROSION AND SEDIMENTATION CONTROL PLAN HAS BEEN APPROVED AND THE AGENCY THAT APPROVED THE PLAN HAS BEEN NOTIFIED. IF THE FINANCIALLY RESPONSIBLE PARTY HAS CONVEYED OWNERSHIP OR CONTROL OF THE TRACT OF LAND FOR WHICH THE EROSION AND SEDIMENTATION CONTROL PLAN HAS BEEN APPROVED, THE NEW OWNER OR PERSON IN CONTROL SHALL CONDUCT AND DOCUMENT INSPECTIONS QUARTERLY UNTIL THE ESTABLISHMENT OF PERMANENT GROUND COVER SUFFICIENT TO RESTRAIN EROSION.

NOTE-5A

Davis CivilSolutions, PA
Site/Infrastructure Engineering/Planning
135-A Charlotte Highway • Asheville, North Carolina 28803
828.299.9449 PH • www.daviscivilsolutions.com

PRELIMINARY
NOT FOR
CONSTRUCTION

Site Plan & Waterline Extension For
BUNCOMBE COUNTY SPORTS PARK
68 APAC DRIVE
ASHEVILLE, NORTH CAROLINA

Job No.: 23117
Date: November 15, 2023
Scale: NTS
Revision:

Details

Sheet
D5

PART III
SELF-INSPECTION, RECORDKEEPING AND REPORTING

SECTION A: SELF-INSPECTION

Self-inspections are required during normal business hours in accordance with the table below. When adverse weather or site conditions would cause the safety of the inspection personnel to be in jeopardy, the inspection may be delayed until the next business day on which it is safe to perform the inspection. In addition, when a storm event of equal to or greater than 1.0 inch occurs outside of normal business hours, the self-inspection shall be performed upon the commencement of the next business day. Any time when inspections were delayed shall be noted in the Inspection Record.

Inspect	Frequency (during normal business hours)	Inspection records must include:
(1) Rain gauge maintained in good working order	Daily	Daily rainfall amounts. If no daily rain gauge observations are made during weekend or holiday periods, and no individual-day rainfall information is available, record the cumulative rain measurement for those un-attended days (and this will determine if a site inspection is needed). Days on which no rainfall occurred shall be recorded as "zero." The permittee may use another rain-monitoring device approved by the Division.
(2) E&SC Measures	At least once per 7 calendar days and within 24 hours of a rain event ≥ 1.0 inch in 24 hours	1. Identification of the measures inspected, 2. Date and time of the inspection, 3. Name of the person performing the inspection, 4. Indication of whether the measures were operating properly, 5. Description of maintenance needs for the measure, 6. Description, evidence, and date of corrective actions taken.
(3) Stormwater discharge outfalls (SDOs)	At least once per 7 calendar days and within 24 hours of a rain event ≥ 1.0 inch in 24 hours	1. Identification of the discharge outfalls inspected, 2. Date and time of the inspection, 3. Name of the person performing the inspection, 4. Evidence of indicators of stormwater pollution such as oil sheen, floating or suspended solids or discoloration, 5. Indication of visible sediment leaving the site, 6. Description, evidence, and date of corrective actions taken.
(4) Perimeter of site	At least once per 7 calendar days and within 24 hours of a rain event ≥ 1.0 inch in 24 hours	If visible sedimentation is found outside site limits, then a record of the following shall be made: 1. Actions taken to clean up or stabilize the sediment that has left the site limits, 2. Description, evidence, and date of corrective actions taken, and 3. An explanation as to the actions taken to control future releases.
(5) Streams or wetlands onsite or offsite (where accessible)	At least once per 7 calendar days and within 24 hours of a rain event ≥ 1.0 inch in 24 hours	If the stream or wetland has increased visible sedimentation or a stream has visible increased turbidity from the construction activity, then a record of the following shall be made: 1. Description, evidence and date of corrective actions taken, and 2. Records of the required reports to the appropriate Division Regional Office per Part III, Section C, Item (2)(a) of this permit.
(6) Ground stabilization measures	After each phase of grading	1. The phase of grading (installation of perimeter E&SC measures, clearing and grubbing, installation of storm drainage facilities, completion of all land-disturbing activity, construction or redevelopment, permanent ground cover). 2. Documentation that the required ground stabilization measures have been provided within the required timeframe or an assurance that they will be provided as soon as possible.

NOTE: The rain inspection resets the required 7 calendar day inspection requirement.

PART III
SELF-INSPECTION, RECORDKEEPING AND REPORTING

SECTION B: RECORDKEEPING

1. E&SC Plan Documentation

The approved E&SC plan as well as any approved deviation shall be kept on the site. The approved E&SC plan must be kept up-to-date throughout the coverage under this permit. The following items pertaining to the E&SC plan shall be kept on site and available for inspection at all times during normal business hours.

Item to Document	Documentation Requirements
(a) Each E&SC measure has been installed and does not significantly deviate from the locations, dimensions and relative elevations shown on the approved E&SC plan.	Initial and date each E&SC measure on a copy of the approved E&SC plan or complete, date and sign an inspection report that lists each E&SC measure shown on the approved E&SC plan. This documentation is required upon the initial installation of the E&SC measures or if the E&SC measures are modified after initial installation.
(b) A phase of grading has been completed.	Initial and date a copy of the approved E&SC plan or complete, date and sign an inspection report to indicate completion of the construction phase.
(c) Ground cover is located and installed in accordance with the approved E&SC plan.	Initial and date a copy of the approved E&SC plan or complete, date and sign an inspection report to indicate compliance with approved ground cover specifications.
(d) The maintenance and repair requirements for all E&SC measures have been performed.	Complete, date and sign an inspection report.
(e) Corrective actions have been taken to E&SC measures.	Initial and date a copy of the approved E&SC plan or complete, date and sign an inspection report to indicate the completion of the corrective action.

2. Additional Documentation to be Kept on Site

In addition to the E&SC plan documents above, the following items shall be kept on the site and available for inspectors at all times during normal business hours, unless the Division provides a site-specific exemption based on unique site conditions that make this requirement not practical:

(a) This General Permit as well as the Certificate of Coverage, after it is received.

(b) Records of inspections made during the previous twelve months. The permittee shall record the required observations on the Inspection Record Form provided by the Division or a similar inspection form that includes all the required elements. Use of electronically-available records in lieu of the required paper copies will be allowed if shown to provide equal access and utility as the hard-copy records.

3. Documentation to be Retained for Three Years

All data used to complete the e-NOI and all inspection records shall be maintained for a period of three years after project completion and made available upon request. [40 CFR 122.41]

PART III
SELF-INSPECTION, RECORDKEEPING AND REPORTING

SECTION C: REPORTING

1. Occurrences that Must be Reported

Permittees shall report the following occurrences:

(a) Visible sediment deposition in a stream or wetland.

(b) Oil spills if:
- They are 25 gallons or more,
- They are less than 25 gallons but cannot be cleaned up within 24 hours,
- They cause sheen on surface waters (regardless of volume), or
- They are within 100 feet of surface waters (regardless of volume).

(c) Releases of hazardous substances in excess of reportable quantities under Section 311 of the Clean Water Act (Ref: 40 CFR 110.3 and 40 CFR 117.3) or Section 102 of CERCLA (Ref: 40 CFR 302.4) or G.S. 143-215.85.

(d) Anticipated bypasses and unanticipated bypasses.

(e) Noncompliance with the conditions of this permit that may endanger health or the environment.

2. Reporting Timeframes and Other Requirements

After a permittee becomes aware of an occurrence that must be reported, he shall contact the appropriate Division regional office within the timeframes and in accordance with the other requirements listed below. Occurrences outside normal business hours may also be reported to the Department's Environmental Emergency Center personnel at (800) 858-0368.

Occurrence	Reporting Timeframes (After Discovery) and Other Requirements
(a) Visible sediment deposition in a stream or wetland	• ***Within 24 hours***, an oral or electronic notification. • ***Within 7 calendar days***, a report that contains a description of the sediment and actions taken to address the cause of the deposition. Division staff may waive the requirement for a written report on a case-by-case basis. • If the stream is named on the NC 303(d) list as impaired for sediment-related causes, the permittee may be required to perform additional monitoring, inspections or apply more stringent practices if staff determine that additional requirements are needed to assure compliance with the federal or state impaired-waters conditions.
(b) Oil spills and release of hazardous substances per Item 1(b)-(c) above	• ***Within 24 hours***, an oral or electronic notification. The notification shall include information about the date, time, nature, volume and location of the spill or release.
(c) Anticipated bypasses [40 CFR 122.41(m)(3)]	• ***A report at least ten days before the date of the bypass, if possible***. The report shall include an evaluation of the anticipated quality and effect of the bypass.
(d) Unanticipated bypasses [40 CFR 122.41(m)(3)]	• ***Within 24 hours***, an oral or electronic notification. • ***Within 7 calendar days,*** a report that includes an evaluation of the quality and effect of the bypass.
(e) Noncompliance with the conditions of this permit that may endanger health or the environment[40 CFR 122.41(l)(7)]	• ***Within 24 hours***, an oral or electronic notification. • ***Within 7 calendar days***, a report that contains a description of the noncompliance, and its causes; the period of noncompliance, including exact dates and times, and if the noncompliance has not been corrected, the anticipated time noncompliance is expected to continue; and steps taken or planned to reduce, eliminate, and prevent reoccurrence of the noncompliance. [40 CFR 122.41(l)(6). • Division staff may waive the requirement for a written report on a case-by-case basis.

PART II, SECTION G, ITEM (4)
DRAW DOWN OF SEDIMENT BASINS FOR MAINTENANCE OR CLOSE OUT

Sediment basins and traps that receive runoff from drainage areas of one acre or more shall use outlet structures that withdraw water from the surface when these devices need to be drawn down for maintenance or close out unless this is infeasible. The circumstances in which it is not feasible to withdraw water from the surface shall be rare (for example, times with extended cold weather). Non-surface withdrawals from sediment basins shall be allowed only when all of the following criteria have been met:

(a) The E&SC plan authority has been provided with documentation of the non-surface withdrawal and the specific time periods or conditions in which it will occur. The non-surface withdrawal shall not commence until the E&SC plan authority has approved these items,
(b) The non-surface withdrawal has been reported as an anticipated bypass in accordance with Part III, Section C, Item (2)(c) and (d) of this permit,
(c) Dewatering discharges are treated with controls to minimize discharges of pollutants from stormwater that is removed from the sediment basin. Examples of appropriate controls include properly sited, designed and maintained dewatering tanks, weir tanks, and filtration systems,
(d) Vegetated, upland areas of the sites or a properly designed stone pad is used to the extent feasible at the outlet of the dewatering treatment devices described in Item (c) above,
(e) Velocity dissipation devices such as check dams, sediment traps, and riprap are provided at the discharge points of all dewatering devices, and
(f) Sediment removed from the dewatering treatment devices described in Item (c) above is disposed of in a manner that does not cause deposition of sediment into waters of the United States.

NCG01 SELF-INSPECTION, RECORDKEEPING AND REPORTING

EFFECTIVE: 04/01/19

Davis CivilSolutions, PA
Site/Infrastructure Engineering/Planning
115-A Charlotte Highway• Asheville, North Carolina 28803
828-299-9149 PH • www.daviscivilsolutions.com

PRELIMINARY NOT FOR CONSTRUCTION

Site Plan & Waterline Extension For
BUNCOMBE COUNTY SPORTS PARK
68 APAC DRIVE
ASHEVILLE, NORTH CAROLINA

Job No: 23117
Date: November 15, 2023
Scale: NTS
Revision:

Details

Sheet
D6

GROUND STABILIZATION AND MATERIALS HANDLING PRACTICES FOR COMPLIANCE WITH THE NCG01 CONSTRUCTION GENERAL PERMIT

Implementing the details and specifications on this plan sheet will result in the construction activity being considered compliant with the Ground Stabilization and Materials Handling sections of the NCG01 Construction General Permit (Sections E and F, respectively). The permittee shall comply with the Erosion and Sediment Control plan approved by the delegated authority having jurisdiction. All details and specifications shown on this sheet may not apply depending on site conditions and the delegated authority having jurisdiction.

SECTION E: GROUND STABILIZATION

Required Ground Stabilization Timeframes

Site Area Description	Stabilize within this many calendar days after ceasing land disturbance	Timeframe variations
(a) Perimeter dikes, swales, ditches, and perimeter slopes	7	None
(b) High Quality Water (HQW) Zones	7	None
(c) Slopes steeper than 3:1	7	If slopes are 10' or less in length and are not steeper than 2:1, 14 days are allowed
(d) Slopes 3:1 to 4:1	14	-7 days for slopes greater than 50' in length and with slopes steeper than 4:1 -7 days for perimeter dikes, swales, ditches, perimeter slopes and HQW Zones -10 days for Falls Lake Watershed
(e) Areas with slopes flatter than 4:1	14	-7 days for perimeter dikes, swales, ditches, perimeter slopes and HQW Zones -10 days for Falls Lake Watershed unless there is zero slope

Note: After the permanent cessation of construction activities, any areas with temporary ground stabilization shall be converted to permanent ground stabilization as soon as practicable but in no case longer than 90 calendar days after the last land disturbing activity. Temporary ground stabilization shall be maintained in a manner to render the surface stable against accelerated erosion until permanent ground stabilization is achieved.

GROUND STABILIZATION SPECIFICATION

Stabilize the ground sufficiently so that rain will not dislodge the soil. Use one of the techniques in the table below:

Temporary Stabilization	Permanent Stabilization
• Temporary grass seed covered with straw or other mulches and tackifiers • Hydroseeding • Rolled erosion control products with or without temporary grass seed • Appropriately applied straw or other mulch • Plastic sheeting	• Permanent grass seed covered with straw or other mulches and tackifiers • Geotextile fabrics such as permanent soil reinforcement matting • Hydroseeding • Shrubs or other permanent plantings covered with mulch • Uniform and evenly distributed ground cover sufficient to restrain erosion • Structural methods such as concrete, asphalt or retaining walls • Rolled erosion control products with grass seed

POLYACRYLAMIDES (PAMS) AND FLOCCULANTS

1. Select flocculants that are appropriate for the soils being exposed during construction, selecting from the *NC DWR List of Approved PAMS/Flocculants*.
2. Apply flocculants at or before the inlets to Erosion and Sediment Control Measures.
3. Apply flocculants at the concentrations specified in the *NC DWR List of Approved PAMS/Flocculants* and in accordance with the manufacturer's instructions.
4. Provide ponding area for containment of treated Stormwater before discharging offsite.
5. Store flocculants in leak-proof containers that are kept under storm-resistant cover or surrounded by secondary containment structures.

EQUIPMENT AND VEHICLE MAINTENANCE

1. Maintain vehicles and equipment to prevent discharge of fluids.
2. Provide drip pans under any stored equipment.
3. Identify leaks and repair as soon as feasible, or remove leaking equipment from the project.
4. Collect all spent fluids, store in separate containers and properly dispose as hazardous waste (recycle when possible).
5. Remove leaking vehicles and construction equipment from service until the problem has been corrected.
6. Bring used fuels, lubricants, coolants, hydraulic fluids and other petroleum products to a recycling or disposal center that handles these materials.

LITTER, BUILDING MATERIAL AND LAND CLEARING WASTE

1. Never bury or burn waste. Place litter and debris in approved waste containers.
2. Provide a sufficient number and size of waste containers (e.g dumpster, trash receptacle) on site to contain construction and domestic wastes.
3. Locate waste containers at least 50 feet away from storm drain inlets and surface waters unless no other alternatives are reasonably available.
4. Locate waste containers on areas that do not receive substantial amounts of runoff from upland areas and does not drain directly to a storm drain, stream or wetland.
5. Cover waste containers at the end of each workday and before storm events or provide secondary containment. Repair or replace damaged waste containers.
6. Anchor all lightweight items in waste containers during times of high winds.
7. Empty waste containers as needed to prevent overflow. Clean up immediately if containers overflow.
8. Dispose waste off-site at an approved disposal facility.
9. On business days, clean up and dispose of waste in designated waste containers.

PAINT AND OTHER LIQUID WASTE

1. Do not dump paint and other liquid waste into storm drains, streams or wetlands.
2. Locate paint washouts at least 50 feet away from storm drain inlets and surface waters unless no other alternatives are reasonably available.
3. Contain liquid wastes in a controlled area.
4. Containment must be labeled, sized and placed appropriately for the needs of site.
5. Prevent the discharge of soaps, solvents, detergents and other liquid wastes from construction sites.

PORTABLE TOILETS

1. Install portable toilets on level ground, at least 50 feet away from storm drains, streams or wetlands unless there is no alternative reasonably available. If 50 foot offset is not attainable, provide relocation of portable toilet behind silt fence or place on a gravel pad and surround with sand bags.
2. Provide staking or anchoring of portable toilets during periods of high winds or in high foot traffic areas.
3. Monitor portable toilets for leaking and properly dispose of any leaked material. Utilize a licensed sanitary waste hauler to remove leaking portable toilets and replace with properly operating unit.

EARTHEN STOCKPILE MANAGEMENT

1. Show stockpile locations on plans. Locate earthen-material stockpile areas at least 50 feet away from storm drain inlets, sediment basins, perimeter sediment controls and surface waters unless it can be shown no other alternatives are reasonably available.
2. Protect stockpile with silt fence installed along toe of slope with a minimum offset of five feet from the toe of stockpile.
3. Provide stable stone access point when feasible.
4. Stabilize stockpile within the timeframes provided on this sheet and in accordance with the approved plan and any additional requirements. Soil stabilization is defined as vegetative, physical or chemical coverage techniques that will restrain accelerated erosion on disturbed soils for temporary or permanent control needs.

ONSITE CONCRETE WASHOUT STRUCTURE WITH LINER

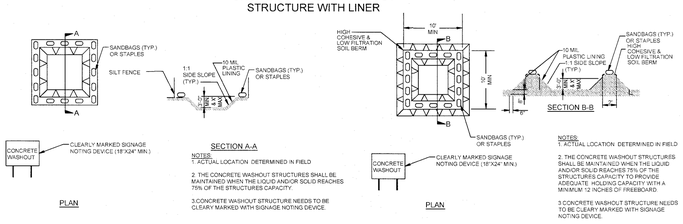

CONCRETE WASHOUTS

1. Do not discharge concrete or cement slurry from the site.
2. Dispose of, or recycle settled, hardened concrete residue in accordance with local and state solid waste regulations and at an approved facility.
3. Manage washout from mortar mixers in accordance with the above item and in addition place the mixer and associated materials on impervious barrier and within lot perimeter silt fence.
4. Install temporary concrete washouts per local requirements, where applicable. If an alternate method or product is to be used, contact your approval authority for review and approval. If local standard details are not available, use one of the two types of temporary concrete washouts provided on this detail.
5. Do not use concrete washouts for dewatering or storing defective curb or sidewalk sections. Stormwater accumulated within the washout may not be pumped into or discharged to the storm drain system or receiving surface waters. Liquid waste must be pumped out and removed from project.
6. Locate washouts at least 50 feet from storm drain inlets and surface waters unless it can be shown that no other alternatives are reasonably available. At a minimum, install protection of storm drain inlet(s) closest to the washout which could receive spills or overflow.
7. Locate washouts in an easily accessible area, on level ground and install a stone entrance pad in front of the washout. Additional controls may be required by the approving authority.
8. Install at least one sign directing concrete trucks to the washout within the project limits. Post signage on the washout itself to identify this location.
9. Remove leavings from the washout when at approximately 75% capacity to limit overflow events. Replace the tarp, sand bags or other temporary structural components when no longer functional. When utilizing alternative or proprietary products, follow manufacturer's instructions.
10. At the completion of the concrete work, remove remaining leavings and dispose of in an approved disposal facility. Fill pit, if applicable, and stabilize any disturbance caused by removal of washout.

HERBICIDES, PESTICIDES AND RODENTICIDES

1. Store and apply herbicides, pesticides and rodenticides in accordance with label restrictions.
2. Store herbicides, pesticides and rodenticides in their original containers with the label, which lists directions for use, ingredients and first aid steps in case of accidental poisoning.
3. Do not store herbicides, pesticides and rodenticides in areas where flooding is possible or where they may spill or leak into wells, stormwater drains, ground water or surface water. If a spill occurs, clean area immediately.
4. Do not stockpile these materials onsite.

HAZARDOUS AND TOXIC WASTE

1. Create designated hazardous waste collection areas on-site.
2. Place hazardous waste containers under cover or in secondary containment.
3. Do not store hazardous chemicals, drums or bagged materials directly on the ground.

NCG01 GROUND STABILIZATION AND MATERIALS HANDLING

EFFECTIVE: 04/01/19

Davis CivilSolutions, PA
Site/Infrastructure Engineering/Planning
135-A Charlotte Highway • Asheville, North Carolina 28803
828-299-9419 PH • www.davisciviltechnologies.com

PRELIMINARY NOT FOR CONSTRUCTION

Site Plan & Waterline Extension For
BUNCOMBE COUNTY SPORTS PARK
68 APAC DRIVE
ASHEVILLE, NORTH CAROLINA

Job No.: 23117
Date: November 15, 2023
Scale: NTS
Revision:

Details

Sheet
D7

DEVELOPMENT DATA BLOCK:

PROPERTY OWNER: COUNTY OF BUNCOMBE
OWNER CONTACT: LYNN PEGG, CPRP
OWNER ADDRESS: 46 VALLEY ST, ASHEVILLE, NC 28801
OWNER PHONE NUMBER: (828) 250-6707

DEVELOPER: ASHEVILLE BUNCOMBE YOUTH SOCCER ASSOCIATION
DEVELOPER CONTACT: MIKE ROTTJAKOB
DEVELOPER ADDRESS: 593 AZAELA ROAD EAST, ASHEVILLE, NC 28805
DEVELOPER PHONE NUMBER: (828) 299-7277 x 302

CIVIL ENGINEER/DESIGNER: LEADING DESIGN AND DEVELOPMENT
ENGINEERING CONTACT: MATT VETTER, P.E.
ENGINEERING ADDRESS: 13384 BERLIN TURNPIKE, LOVETTSVILLE, VA 20180
ENGINEERING PHONE NUMBER: (703) 999-9748

COA PERMIT APPLICATION No.: 21-04369PZ
COA WATER ENGINEERING PROJECT No.: WPFY-20-21-041

PIN NUMBER(S): 9617-76-0192, 9617-76-4108
SIZE OF PROPERTY(S): 8.59 AC, 2.63 AC
TOTAL SIZE OF PROPERTY(S): 11.22 AC

AMOUNT OF DISTURBED AREA: 5.80 ACRES (WITHIN CITY OF ASHEVILLE)

IMPERVIOUS COVER (PRE): 0.50 ACRES (4.5%)
PERVIOUS COVER (PRE): 10.72 ACRES (95.5%)
IMPERVIOUS COVER (POST): 1.87 ACRES (16.67%)
PERVIOUS COVER (POST): 9.35 ACRES (83.33%)
INCREASE IN IMPERVIOUS: 1.62 ACRES

EARTHWORK:
NET CUT/FILL: 2,850 CY* (CUT)
*FOR REFERENCE ONLY. CONTRACTOR RESPONSIBLE FOR DETERMINING QUANTITIES AND PREPARING A TAKE-OFF.

SOIL TYPES:
CkB2 - CLIFTON CLAY LOAM - B
EvD2 - EVARD-COWEE COMPLEX - B
Ud - UDORTHENTS - C
UhE - UDORTHENTS - URBAN LAND COMPLEX - A
UnB - UNISON LOAM - C

ZONING DISTRICT: INST - INSTITUTIONAL DISTRICT

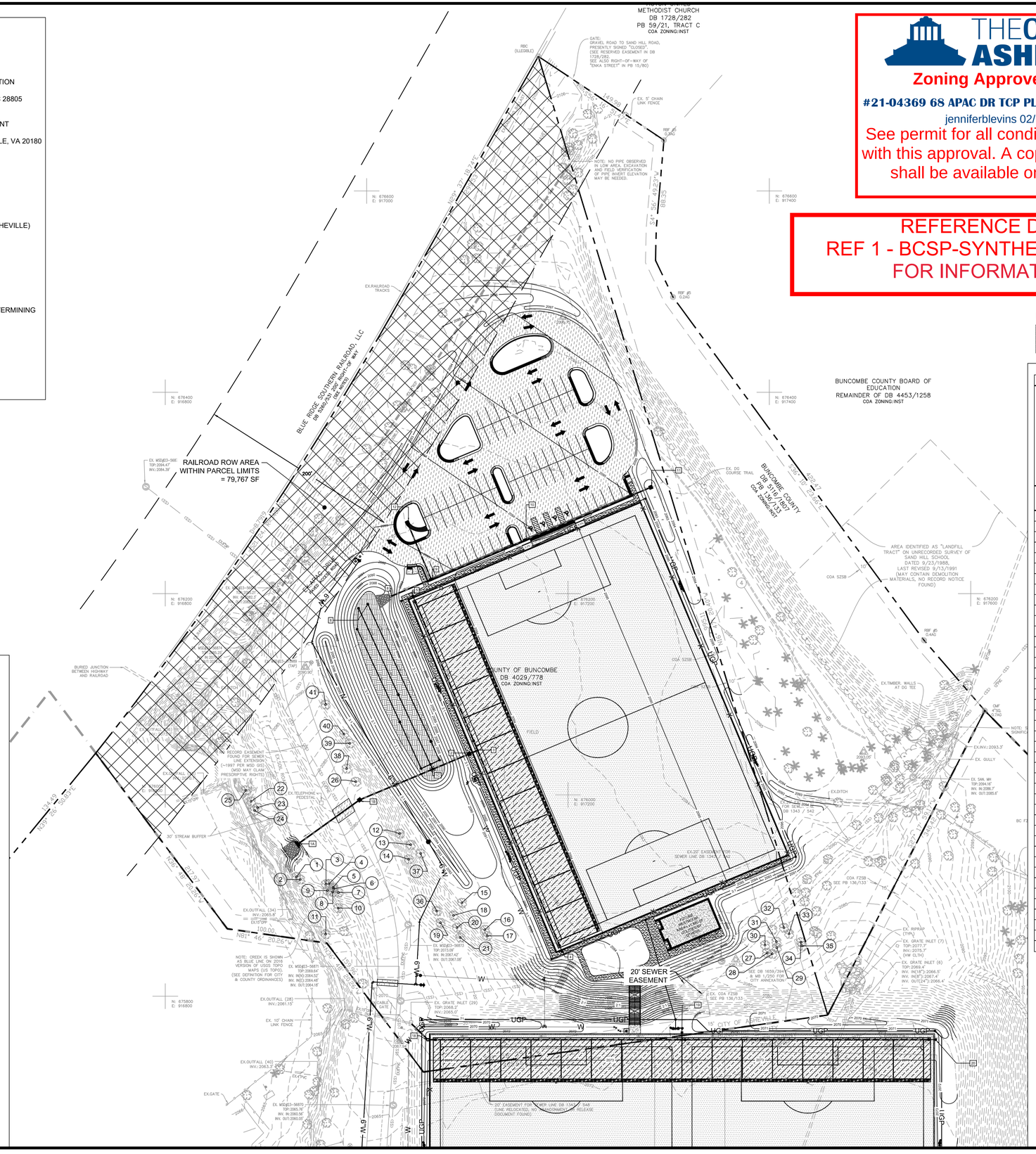

LEGEND

BOLLARD/POST	
BUSHES	4'
CLEAN OUT	C.O.
DRAIN INLET	
ELECTRIC BOX	E.B.
ELECTRIC MH	E
ELECTRIC RISER	E.R.
FIRE HYDRANT	
FIRE CONNECTION	FDC
GAS VALVE	
HAND BOX	H.B.
INLET MH	I
METAL POLE	MP
POWER POLE	
PROPERTY MON.	600
ROOF DRAIN	RD
SANITARY MH	S
SIGN (ONE-POST)	
SIGN (TWO POST)	
STORM DRAIN MH	D
STREET LIGHT	
TELEPHONE MH	T
TELEPHONE RISER	T.R.
TRAVERSE STATION	900
TREES	
UNKNOWN MH	U
WATER MH	W
WATER FOUNTAIN	*W.F.
WATER VALVE	
WELL	W
MAJOR CONTOUR	500
MINOR CONTOUR	501
WALL	
BUILDING	
CONC. CURB	
CONC. PAD/WALK	
SURVEY LIMITS	
FENCE LINE	X X X
WOODS LINE	
U/G STORM	D
BENCH MARKER	

THE CITY OF ASHEVILLE

Zoning Approved Plans

#21-04369 68 APAC DR TCP PLAN APPROVAL 021822

jenniferblevins 02/18/2022

See permit for all conditions associated with this approval. A copy of these plans shall be available on the job site.

REFERENCE DRAWING:
REF 1 - BCSP-SYNTHETIC TURF FIELDS
FOR INFORMATION ONLY

SCALE 1"=50'
0 50' 100'

LEGEND

HATCH DEPICTS RAILROAD R-O-W ON PARCEL LIMITS (79,767SF)

TREE CANOPY PRESERVATION CALCULATIONS

PARCEL SIZE = 374,180 SF (8.59 AC)
RAILROAD R-O-W ON PARCEL = 79,767 SF
SITE AREA FOR PURPOSE OF TCP = 374,180SF - 79,767SF = 294,413 SF
EXISTING TREE CANOPY = 36%
RESOURCE MANAGEMENT DISTRICT = SUBURBAN
LAND USE = INSTITUTIONAL
CLASS C - UNDER 40% CANOPY
EXISTING TREE CANOPY REQUIRED (15%) = (294,413 SF * 15%) = 44,162 SF
NEW TREE CANOPY REQUIRED (0%) = 0 SF

TREE ID	DBH (in)	SPECIES	SIZE CLASSIFICATION	CANOPY CREDIT (SF)	CRITICAL ROOT ZONE (CRZ)
1	15	LOCUST	LARGE	1,600	15' RADIUS
2	12	LOCUST	LARGE	1,600	12' RADIUS
3	12	LOCUST	LARGE	1,600	12' RADIUS
4	12	LOCUST	LARGE	1,600	12' RADIUS
5	8	LOCUST	LARGE	960	8' RADIUS
6	10	LOCUST	LARGE	1,600	10' RADIUS
7	18	LOCUST	LARGE	1,600	18' RADIUS
8	8	LOCUST	LARGE	960	8' RADIUS
9	16	CHERRY	SMALL	400	16' RADIUS
10	8	LOCUST	LARGE	960	8' RADIUS
11	8	LOCUST	LARGE	960	8' RADIUS
12	12	CHERRY	SMALL	400	12' RADIUS
13	12	LOCUST	LARGE	1,600	12' RADIUS
14	12	CHERRY	SMALL	400	12' RADIUS
15	8	LOCUST	LARGE	960	8' RADIUS
16	14	PEAR	SMALL	400	14' RADIUS
17	14	PEAR	SMALL	400	14' RADIUS
18	12	SYCAMORE	LARGE	1,600	12' RADIUS
19	16	SYCAMORE	LARGE	1,600	16' RADIUS
20	20	SYCAMORE	LARGE	1,600	20' RADIUS
21	12	CHERRY	SMALL	400	12' RADIUS
22	12	LOCUST	LARGE	1,600	12' RADIUS
23	10	LOCUST	LARGE	1,600	10' RADIUS
24	8	LOCUST	LARGE	960	8' RADIUS
25	12	SOURWOOD	SMALL	400	12' RADIUS
26	18	SYCAMORE	LARGE	1,600	18' RADIUS
27	8	LOCUST	LARGE	960	8' RADIUS
28	8	CHERRY	SMALL	142	8' RADIUS
29	8	POPLAR	LARGE	960	8' RADIUS
30	8	POPLAR	LARGE	960	8' RADIUS
31	14	POPLAR	LARGE	1,600	14' RADIUS
32	8	CHERRY	SMALL	142	8' RADIUS
33	12	CHERRY	SMALL	400	12' RADIUS
34	8	LOCUST	LARGE	960	8' RADIUS
35	12	SYCAMORE	LARGE	1,600	12' RADIUS
36	16	SYCAMORE	LARGE	1,600	12' RADIUS
37	13	CHERRY	SMALL	400	12' RADIUS
38	40	WILLOW	LARGE	1,600	12' RADIUS
39	14	MAPLE	LARGE	1,600	12' RADIUS
40	11	CHERRY	SMALL	400	12' RADIUS
41	15	OAK	LARGE	1,600	12' RADIUS
			TOTAL CANOPY PRESERVED	**44,284**	**SF**
			TOTAL CANOPY REQUIRED	44,162	SF
			TOTAL CANOPY REMANING	0	SF

NOTES:

1. PURSUANT TO SECTION 7-19-3 OF THE UNIFIED DEVELOPMENT ORDINANCE, THE EXISTING TREE CANOPY COVERAGE HAS BEEN DETERMINED UTILIZING AERIAL ANALYSIS AND IS LIMITED TO WITHIN THE BOUNDARY OF THE SUBJECT PROPERTY.
2. AREAS DESIGNATED AS TREE CANOPY PROTECTION AREAS SHALL REMAIN SUCH IN PERPETUITY. TREE REMOVAL SHALL BE PROHIBITED IN THESE AREAS UNLESS OTHERWISE PERMITTED.

SEAL:
NORTH CAROLINA PROFESSIONAL ENGINEER SEAL 047493 MATTHEW S. VETTER
PRELIMINARY NOT FOR CONSTRUCTION
11/04/2021

LEADING DESIGN AND DEVELOPMENT, LLC.
13384 BERLIN TURNPIKE
LOVETTSVILLE, VA 20180
TEL:703.999.9748
CONTACT: MATT VETTER, P.E.

CLIENT:

REVISION

No.	DESCRIPTION	DATE
1	COA COMMENTS	08/09/2021
2	COA COMMENTS	11/04/2021

PROJECT NAME & ADDRESS:
BUNCOMBE COUNTY SPORTS PARK - SYNTHETIC TURF FIELDS
58 APAC DRIVE
ASHEVILLE, NC 28801

PROPERTY OWNER:
COUNTY OF BUNCOMBE
175 BINGHAM RD
ASHEVILLE, NC 28806
(828) 450-8317

DEVELOPMENT DATA:
PIN #(S): 9617-76-0192, 9617-76-4108
SIZE OF PROPERTY(S): 8.59 AC, 2.63 AC
SIZE OF PROPERTY(S): 11.22 AC
ZONING DISTRICT: INST
LAND USE CODE: GVMT/EXMT/VAC

MISS UTILITY NOTE:
FOR LOCATION OF UTILITIES CALL NORTH CAROLINA CALL CENTER AT 811 OR 1-800-632-4949 (48) HOURS IN ADVANCE OF ANY WORK WITHIN THIS VICINITY

DRAWN BY	DESIGNED	CHECKED
KWG	MSV	RJT

PROJECT No: 2018-06

DATE: 11-04-2021

DRAWING TITLE:
TREE CANOPY PROTECTION PLAN

SCALE: SEE PLAN SHEET

DRAWING No:
L1.2

COA PERMIT #: 21-04369PZ

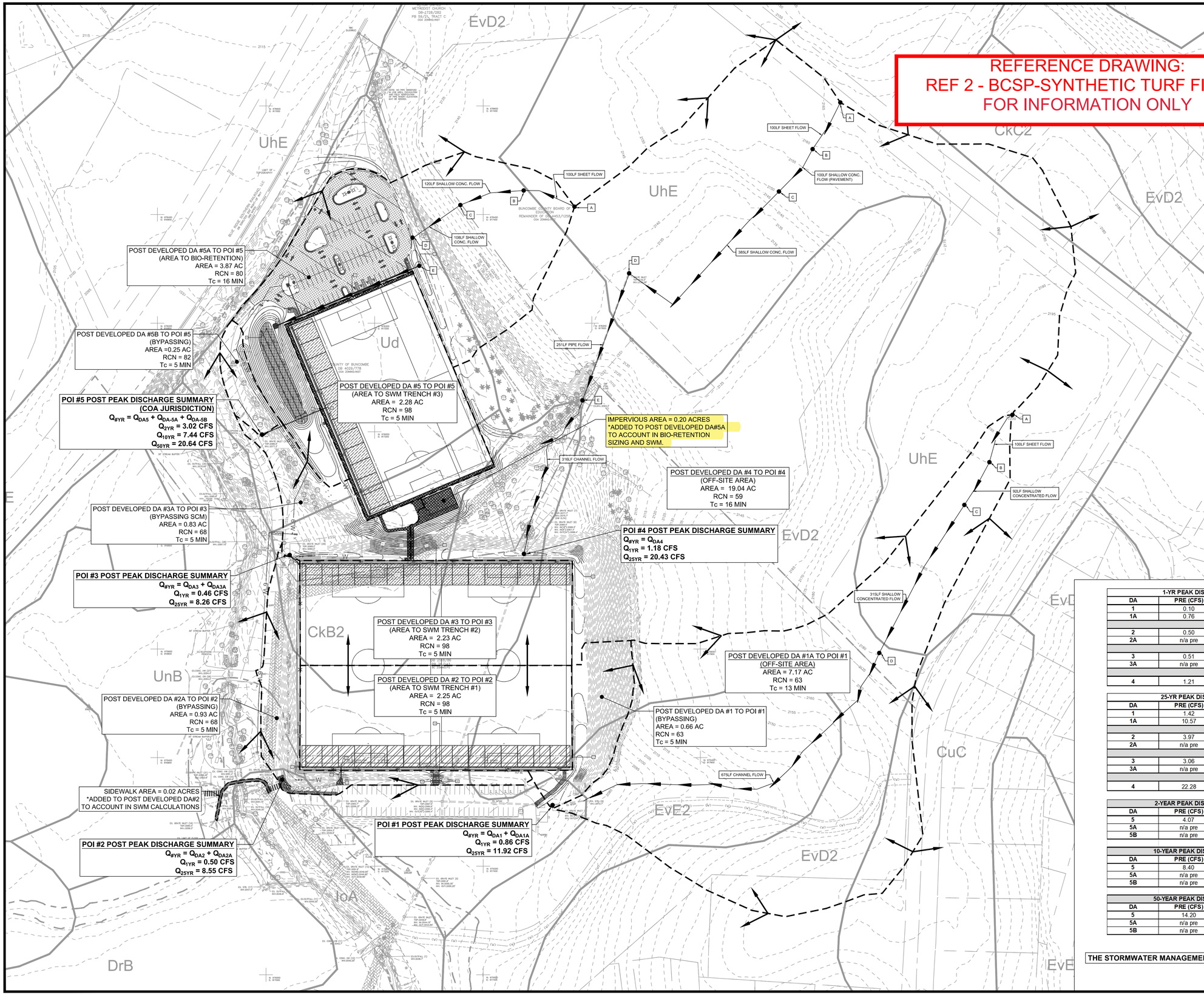

SCALE 1"=80'

0 80' 160'

NRCS SOIL SURVEY		
NAME	SYMBOL	HSG
Clifton Clay Loam	CkB2	B
Clifton-Urban Land Complex	CuC	B
Evard-Cowee Complex	EvD2	B
Evard-Cowee Complex	EvE2	C
Iotla Loam	IoA	A/D
Udorthents	Ud	C
Udorthents - Urban Land Complex	UhE	A
Unison Loam	UnB	C

LEGEND:

- DRAINAGE DIVIDE
- T_C FLOW PATH
- SOILS DIVIDE
- CUC — SOILS IDENTIFICATION

1-YR PEAK DISCAHRGE SUMMARY (COUNTY)			
DA	PRE (CFS)	POST (CFS)	DELTA (POST - PRE)
1	0.10	0.10	0.00
1A	0.76	0.76	
2	0.50	0.13	0.00
2A	n/a pre	0.37	
3	0.51	0.12	-0.05
3A	n/a pre	0.34	
4	1.21	1.18	-0.03

25-YR PEAK DISCAHRGE SUMMARY (COUNTY)			
DA	PRE (CFS)	POST (CFS)	DELTA (POST - PRE)
1	1.42	1.35	-0.07
1A	10.57	10.57	
2	3.97	6.16	4.57
2A	n/a pre	2.39	
3	3.06	6.18	5.20
3A	n/a pre	2.08	
4	22.28	20.43	-1.86

2-YEAR PEAK DISCHARGE SUMMARY POI#5 (COA)			
DA	PRE (CFS)	POST (CFS)	DELTA (POST - PRE)
5	4.07	0.42	-2.05
5A	n/a pre	1.14	
5B	n/a pre	0.46	

10-YEAR PEAK DISCHARGE SUMMARY POI#5 (COA)			
DA	PRE (CFS)	POST (CFS)	DELTA (POST - PRE)
5	8.40	3.66	-0.96
5A	n/a pre	2.92	
5B	n/a pre	0.86	

50-YEAR PEAK DISCHARGE SUMMARY POI#5 (COA)			
DA	PRE (CFS)	POST (CFS)	DELTA (POST - PRE)
5	14.20	8.78	6.43
5A	n/a pre	10.55	
5B	n/a pre	1.31	

THE STORMWATER MANAGEMENT NARRATIVE CAN BE FOUND ON SHEET C6.4.

SEAL:

NORTH CAROLINA PROFESSIONAL ENGINEER SEAL MATTHEW S. VETTER

PRELIMINARY NOT FOR CONSTRUCTION

05/25/2021

LEADING DESIGN AND DEVELOPMENT, LLC.
13384 BERLIN TURNPIKE
LOVETTSVILLE, VA 20180
TEL:703.999.9748
www.lddsports.com

CLIENT:

REVISION

No.	DESCRIPTION	DATE
1	COUNTY COMMENTS	05/25/2021

PROJECT NAME & ADDRESS:

BUNCOMBE COUNTY SPORTS PARK - SYNTHETIC TURF FIELDS

58 APAC DRIVE
ASHEVILLE, NC 28801

SITE INFORMATION:

FIRE DISTRICT: FEC
PARCEL PIN: 9617-75-0217-00000
SIZE: 44.52 ACRES
LAND USE CODE: COUNTY PARKS
ZONED: PUBLIC SERVICE DIST. (PS)
DEED REF: 2518 / 0086
PLAT BOOK & PLAT PAGE: 0076 / 0143

MISS UTILITY NOTE:
FOR LOCATION OF UTILITIES CALL NORTH CAROLINA CALL CENTER AT 811 OR 1-800-632-4949 (48) HOURS IN ADVANCE OF ANY WORK WITHIN THIS VICINITY

DRAWN BY	DESIGNED	CHECKED
KWG	MSV	RJT

PROJECT No: 2018-06

DATE: 05-25-2021

DRAWING TITLE:
POST DEVELOPED DRAINAGE AREA MAP

SCALE: SEE PLAN SHEET

DRAWING No:
C6.2

STRUCTURAL NOTES

GE - GENERAL

1. THE STRUCTURE IS DESIGNED IN ACCORDANCE WITH THE NORTH CAROLINA STATE BUILDING CODE - 2018 EDITION (2015 INTERNATIONAL BUILDING CODE WITH CURRENT NORTH CAROLINA AMENDMENTS).

2. THE DESIGN LOADS ARE AS FOLLOWS:

LIVE LOAD
ROOF 20 PSF

SNOW LOAD
GROUND SNOW LOAD P_G 15 PSF
FLAT ROOF SNOW LOAD P_f 15 PSF
SNOW EXPOSURE FACTOR C_e 1.0
SNOW LOAD IMPORTANCE FACTOR I_s 1.0
THERMAL FACTOR C_t 1.1

WIND LOAD
BASIC WIND SPEED V_{ULT} (ASCE 7-10) 115 MPH
V_{ASD} (ASCE 7-10) 90 MPH
RISK CATEGORY II
WIND EXPOSURE C
INTERNAL PRESSURE COEFFICIENT GC_{Pi} ± 0.18
COMPONENTS AND CLADDING PER ASCE 7-10
DESIGN CODE REFERENCE PUBLICATION ASCE 7-10
DESIGN BASE SHEAR VX= 999 K
VY= 999 K

SEISMIC LOAD
SEISMIC RISK CATEGORY II
SEISMIC DESIGN CATEGORY C
SPECTRAL RESPONSE ACCELERATION S_S 31%G
S_1 11%G
SPECTRAL RESPONSE COEFFICIENTS S_{MS} 48%G
S_{M1} 26%G
S_{DS} 32%G
S_{D1} 17%G
SITE CLASS D
SEISMIC IMPORTANCE FACTOR I_E 1.0
BASIC SEISMIC-FORCE-RESISTING SYSTEM INTERMEDIATE REINFORCED MASONRY SHEAR WALLS
RESPONSE MODIFICATION FACTOR R 3.5
SEISMIC RESPONSE COEFFICIENT CS 0.09
DESIGN BASE SHEAR 999 K
ANALYSIS PROCEDURE EQUIVALENT LATERAL FORCE PROCEDURE (ELF) PER SECTION12.8 ASCE 7-10
LATERAL DESIGN CONTROL SEISMIC

PRE-ENGINEERED SYSTEMS AND COMPONENTS SHALL BE DESIGNED BASED ON THE MINIMUM LOAD REQUIREMENTS PER ASCE-7 AND THE ABOVE BASIC LOAD PARAMETERS.

3. THE STRUCTURE HAS BEEN DESIGNED TO WITHSTAND IN-SERVICE LOADS ONLY. METHODS, PROCEDURES, AND SEQUENCES OF CONSTRUCTION ARE THE RESPONSIBILITY OF THE CONTRACTOR. THE CONTRACTOR SHALL TAKE ALL NECESSARY PRECAUTIONS TO MAINTAIN AND INSURE THE INTEGRITY OF THE STRUCTURE AT ALL STAGES OF CONSTRUCTION.

4. STRUCTURAL DRAWINGS SHALL BE USED IN CONJUNCTION WITH ARCHITECTURAL, MECHANICAL, ELECTRICAL, AND PLUMBING DRAWINGS, AND DRAWINGS OF OTHER TRADES. THE CONTRACTOR SHALL BE RESPONSIBLE FOR SEEING THAT THE WORK OF ALL TRADES IS COORDINATED WITH THE STRUCTURAL WORK.

5. CONTRACTOR IS RESPONSIBLE FOR COORDINATING ALL DIMENSIONS SHOWN ON THE TOTAL CONTRACT DOCUMENTS. DO NOT SCALE THE DRAWINGS. FOLLOW WRITTEN DIMENSIONS ONLY.

6. ANYTHING WHICH, IN THE OPINION OF THE CONTRACTOR, APPEARS TO BE DEFICIENCIES, OMISSIONS, CONTRADICTIONS, OR AMBIGUITIES IN THE PLANS OR SPECIFICATIONS SHALL BE BROUGHT TO THE ATTENTION OF THE DESIGNER. CORRECTIONS OR WRITTEN INTERPRETATIONS SHALL BE ISSUED BEFORE CONSTRUCTION OF THE AFFECTED WORK MAY PROCEED.

7. DETAILS ARE MARKED AT THE SPECIFIC LOCATION WHERE THEY APPLY, BUT ALSO INDICATE GENERAL CONSTRUCTION REQUIREMENTS FOR OTHER LOCATION WITH SIMILAR CONDITIONS. DETAILS NOTED AS "TYPICAL" MAY NOT BE REFERENCED ON THE DRAWINGS. TYPICAL DETAILS APPLY AT ALL LOCATIONS WHERE THE TYPE OF CONSTRUCTION SHOWN IN THE TYPICAL DETAIL OCCURS.

8. WHERE CONFLICTS OCCUR BETWEEN NOTES, DRAWINGS, OR SPECIFICATIONS, THE CONTRACTOR SHALL NOT PROCEED WITH THE AFFECTED WORK UNTIL THE STRUCTURAL ENGINEER ISSUES A CLARIFICATION.

9. UNIFORM LIVE LOADS HAVE BEEN REDUCED IN ACCORDANCE WITH THE PROVISIONS OF SECTION 1607.9 OF THE NC STATE BUILDING CODE.

10. HORIZONTAL AND VERTICAL CLEARANCES FROM THE EXISTING ADJACENT STRUCTURE SHALL BE VERIFIED BEFORE CONSTRUCTION IS BEGUN. VARIATIONS FROM THE DIMENSIONS INDICATED ON THE CONTRACT DOCUMENTS SHALL BE BROUGHT TO THE ATTENTION OF THE ARCHITECT AND/OR STRUCTURAL ENGINEER.

11. SEVERAL STRUCTURAL ELEMENTS REQUIRE THE CONTRACTOR TO ENGAGE A PROFESSIONAL ENGINEER LICENSED IN THE STATE OF NORTH CAROLINA TO PROVIDE DESIGN AND/OR DETAILING. SEE INDIVIDUAL NOTE SECTIONS, STRUCTURAL DRAWINGS, AND SPECIFICATIONS FOR ADDITIONAL INFORMATION AND REQUIREMENTS. DELEGATED DESIGN ELEMENTS INCLUDE, BUT ARE NOT LIMITED TO:
- ☐ SPECIALTY FOUNDATION SYSTEM
- ☐ POST-TENSIONED CONCRETE
- ☐ STRUCTURAL PRECAST CONCRETE
- ☐ ARCHITECTURAL PRECAST CONCRETE
- ☐ STRUCTURAL STEEL CONNECTIONS
- ☐ STEEL STAIRS AND RAILINGS
- ☐ STEEL JOISTS & STEEL JOIST GIRDERS
- ☐ PREFABRICATED METAL BUILDING
- ☐ ROOF ANCHORS
- ☐ NON-LOAD BEARING COLD-FORMED STEEL
- ☐ LOAD BEARING COLD-FORMED STEEL
- ☐ LIGHT GAUGE COLD-FORMED STEEL TRUSSES
- ☒ PRE-FABRICATED WOOD TRUSSES

FO - FOUNDATION

1. FOUNDATION DESIGN IS BASED ON A PRESUMPTIVE ALLOWABLE SOIL BEARING PRESSURE OF 2000 PSF.

2. ALL FOOTINGS SHALL BE FOUNDED ON UNDISTURBED SOIL OR A CONTROLLED FILL HAVING A BEARING CAPACITY OF 2000 PSF, AT THE ELEVATIONS SHOWN ON THE STRUCTURAL DRAWINGS. THE CONTRACTOR SHALL RETAIN A GEOTECHNICAL ENGINEER TO FIELD VERIFY ALLOWABLE SOIL BEARING PRESSURE BEFORE FOOTINGS ARE CAST AND REPORTS FURNISHED TO THE ARCHITECT AND/OR ENGINEER FOR REVIEW.

CO - CONCRETE

1. CONCRETE IN THE FOLLOWING AREAS SHALL HAVE NATURAL SAND FINE AGGREGATE AND NORMAL WEIGHT COARSE AGGREGATES CONFORMING TO ASTM C33, TYPE I PORTLAND CEMENT CONFORMING TO ASTM C150, AND SHALL HAVE THE FOLLOWING MINIMUM COMPRESSIVE STRENGTH (F'C) AT 28 DAYS:
FOOTINGS 3000 PSI w/ NO ENTRAINED AIR (FLY ASH OPTIONAL)
INTERIOR SLAB ON GRADE 3000 PSI w/ NO ENTRAINED AIR (FLY ASH OPTIONAL)
EXTERIOR SLABS AND WALKS 4500 PSI w/ 5% ENTRAINED AIR AND FLY ASH

2. ALL CONCRETE SHALL BE MADE IN ACCORDANCE WITH APPROVED DESIGN MIXES AS REQUIRED FOR THE JOB.

3. ALL CONCRETE SHALL CONTAIN ENTRAINED AIR IN ACCORDANCE WITH ACI 318, TABLE 4.2.1, U.O.N.

4. CONCRETE THAT ARRIVES AT THE JOBSITE WITH A SLUMP GREATER THAN 5" SHALL BE REJECTED. CONCRETE WITH A SLUMP LESS THAN 3" SHALL HAVE AN APPROVED SUPER-PLASTICIZER ADDED SUCH THAT THE MINIMUM 3" SLUMP MAY BE ACHIEVED. THE ADDITION OF WATER AT THE JOBSITE, BEYOND THAT HELD-BACK AT THE CONCRETE PLANT, FOR THE PURPOSE OF INCREASING THE SLUMP IS PROHIBITED.

5. THE UNDER-SLAB ON GRADE VAPOR RETARDER SHALL BE 10 MILS THICK AND MEET THE REQUIREMENTS OF ASTM E 1745, CLASS B. PROVIDE THE MANUFACTURER'S RECOMMENDED ADHESIVE OR PRESSURE-SENSITIVE TAPE. PRODUCT SHALL BE EQUIVALENT TO STEGO WRAP, 10 MILS, MANUFACTURED BY STEGO INDUSTRIES, LLC.

6. CONCRETE WALL FORM TIES SHALL BE FACTORY-FABRICATED, REMOVABLE OR SNAP-OFF METAL OR GLASS-FIBER-REINFORCED PLASTIC FORM TIES DESIGNED TO RESIST LATERAL PRESSURE OF FRESH CONCRETE ON FORMS AND TO PREVENT SPALLING OF CONCRETE ON REMOVAL. FURNISH UNITS THAT WILL LEAVE NO CORRODIBLE METAL CLOSER THAN 1 INCH (25 MM) TO THE PLANE OF EXPOSED CONCRETE SURFACE. FURNISH TIES THAT, WHEN REMOVED, WILL LEAVE HOLES NO LARGER THAN 1 INCH (25 MM) IN DIAMETER IN CONCRETE SURFACE.

7. AT THE INTERFACE OF THE CONCRETE SLAB ON GRADE AND VERTICAL STRUCTURAL MEMBERS (E.G. WALLS, COLUMNS), APPLY A BOND-BREAKER TO THE VERTICAL MEMBER FOR THE FULL DEPTH OF THE SLAB. SATISFACTORY PRODUCTS INCLUDE CURING COMPOUND, FORM RELEASE, AND OTHER SIMILAR PRODUCTS. DO NOT USE ASPHALT IMPREGNATED FIBERBOARD OR FELT.

8. THE CONTRACTOR SHALL BE RESPONSIBLE FOR FURNISHING AND INSTALLING ANCHOR BOLTS, CLIPS, INSERTS, CONNECTION PLATES, SLEEVES, SLOTS, AND OTHER REQUIRED ITEMS IN ACCORDANCE WITH THE CONTRACT DRAWINGS, AND IN COOPERATION WITH OTHER TRADES PRIOR TO PLACING THE CONCRETE.

SCHEDULE OF CONCRETE FINISHES:
INTERIOR SLAB ON GRADE TROWEL FINISH.
ELEVATED SLABS TROWEL FINISH.
SLABS TO RECEIVE SETTING BEDS SCRATCH FINISH.
EXTERIOR STEPS AND SIDEWALKS NON-SLIP BROOM FINISH
ALL UNEXPOSED CONCRETE SURFACES, U.O.N. ROUGH FORM FINISH.
ALL EXPOSED CONCRETE SURFACES, U.O.N. SMOOTH RUBBED FINISH.
TOPS OF EXPOSED WALL SURFACES TROWEL FINISH.

CURING METHOD AND TIME: WET CURE INTERIOR SLABS FOR 7 DAYS USING 'ULTRACURE NCF' CURING BLANKET MANUFACTURED BY MCTECH GROUP, OR APPROVED EQUIVALENT.

CR - CONCRETE REINFORCEMENT

1. CONCRETE REINFORCEMENT BARS SHALL CONFORM TO ASTM A615, GRADE 60. REINFORCEMENT DESIGNATED AS CONTINUOUS SHALL LAP 36 BAR DIAMETERS AT SPLICES, UNLESS NOTED OTHERWISE. SEE MASONRY SECTION BELOW FOR LAP REQUIREMENTS IN CMU WALLS.

2. WELDED WIRE REINFORCEMENT SHALL CONFORM TO ASTM A185. REINFORCEMENT SHALL BE FURNISHED IN FLAT SHEETS. LAP ONE FULL MESH.

3. ALL CONCRETE REINFORCEMENT BARS AND WWR SHALL BE ACCURATELY AND SECURELY TIED AND ANCHORED IN PLACE TO PREVENT DISLOCATION DURING THE CONCRETE PLACEMENT OPERATION.

4. PROVIDE CORNER REINFORCEMENT, 36 BAR DIAMETERS x 36 BAR DIAMETERS, AT EACH CONTINUOUS FOOTING CHANGE IN DIRECTION.

5. CONCRETE SLAB ON GRADE SHALL BE THE THICKNESS INDICATED ON PLAN OR DETAILS AND REINFORCED WITH A MINIMUM OF 6X6 W2.1XW2.1 W.W.R.

6. PROVIDE (1) #4 REINFORCEMENT BAR x 4'-0" AT RE-ENTRANT CORNERS AND AROUND THE PERIMETER OF RECTANGULAR HOLES IN THE SLAB, UNLESS OTHERWISE NOTED. PLACE BAR DIAGONAL TO THE CORNER WITH 1" CLEARANCE FROM THE TOP AND THE SIDE OF THE SLAB AT THE CORNER.

7. MINIMUM CONCRETE COVER PROTECTION FOR REINFORCEMENT BARS SHALL CONFORM TO THE AMERICAN CONCRETE INSTITUTE COMMITTEE 318, SECTION 7.7, UNLESS NOTED OTHERWISE.

MA - MASONRY

1. CONCRETE MASONRY SHALL HAVE A MINIMUM COMPRESSIVE STRENGTH (F'M) OF 2,000 PSI AT 28 DAYS. CONCRETE MASONRY UNITS (CMU) SHALL HAVE MINIMUM UNIT STRENGTH OF 2,000 PSI AT 28 DAYS FOR THE AVERAGE NET AREA.

2. MORTAR FOR CMU WALLS SHALL BE TYPE 'S' AND SHALL HAVE A MINIMUM COMPRESSIVE STRENGTH OF 1800 PSI AT 28 DAYS. MORTAR FOR MASONRY VENEERS SHALL BE TYPE 'N' AND SHALL HAVE A MINIMUM COMPRESSIVE STRENGTH OF 750 PSI AT 28 DAYS.

3. ALL CMU CELLS CONTAINING REINFORCEMENT OR OTHERWISE INDICATED TO BE GROUTED SHALL BE FILLED WITH GROUT CONFORMING TO ASTM C-476 "GROUT FOR MASONRY". THE GROUT SHALL HAVE A MINIMUM 28 DAY COMPRESSIVE STRENGTH OF 2500 PSI. THE GROUT DESIGN MIX SHALL BE PROPORTIONED SUCH THAT THE SPECIFIED SLUMP RANGE IS 8"-11". IF THE SLUMP IS LESS THAN THE MINIMUM, ADDITIONAL SLUMP MAY BE ATTAINED AT THE JOBSITE BY THE ADDITION OF AN APPROVED SUPER-PLASTICIZER. NO ADDITIONAL WATER MAY BE ADDED TO THE MIX AT THE JOBSITE TO INCREASE THE SLUMP.

4. THE MASONRY GROUT IN THE CELLS SHALL BE CONSOLIDATED IN ACCORDANCE WITH ACI SPECIFICATIONS. FOR POUR HEIGHTS GREATER THAN 4'-0", CONSOLIDATE USING A MECHANICAL VIBRATOR. FOR POUR HEIGHTS UP TO 4'-0", THOROUGH RODDING MAY BE USED IN LIEU OF THE VIBRATOR. ALL VERTICAL BARS ARE TO BE PLACED IN THE VOIDS BEFORE FILLING THE CELLS WITH CONCRETE.

5. PER ACI-530.1, SECTION 3.5D, MAXIMUM GROUT LIFT HEIGHT SHALL BE 5'-0" FOR WALLS WITH CONTINUOUS BOND BEAMS BETWEEN THE TOP AND BOTTOM OF THE POUR HEIGHT. FOR WALLS WHERE THERE ARE NO BOND BEAMS WITHIN THE POUR HEIGHT, THE MAXIMUM GROUT LIFT SHALL BE 8'-0".

6. FOR GROUT POUR HEIGHTS GREATER THAN 5'-0", CLEAN-OUTS SHALL BE PROVIDED IN THE BOTTOM COURSE OF MASONRY. ALL DEBRIS SHALL BE COMPLETELY REMOVED FROM REINFORCED CELLS.

7. FOR CANTILEVERED WALLS WITH POUR HEIGHTS GREATER THAN 5'-0", CLEAN-OUTS SHALL BE PROVIDED AT THE BASE OF THE WALL FOR CLEANING AND INSPECTION. ALL DEBRIS SHALL BE COMPLETELY REMOVED FROM REINFORCED CELLS.

8. ALL VERTICAL REINFORCEMENT IN MASONRY WALLS SHALL BE LATERALLY STABILIZED BY REBAR POSITIONERS - WIRE-BOND MODEL 3401 OR 3402, OR APPROVED EQUIVALENT. THE POSITIONERS SHALL BE INSTALLED SUCH THAT EACH REINFORCEMENT BAR IS SUPPORTED AT THE TOP AND AT THE BOTTOM.

9. BOND BEAMS SHALL BE REINFORCED WITH (2) #4, CONTINUOUS, U.O.N., AND SHALL CONSIST OF AN OPEN-BOTTOM BOND BEAM BLOCK REINFORCED WITH (2) #4 EXTENDING 24" BEYOND THE EDGE OF THE OPENING, UNLESS NOTED OTHERWISE. THE BOND BEAM REINFORCEMENT EXTENDS CONTINUOUSLY THROUGH ALL WALL CONTROL JOINTS. PROVIDE A CONTINUOUS POLYPROPYLENE GROUT-STOP BENEATH THE BOND BEAM, WIRE-BOND GROUT STOP, OR APPROVED EQUIVALENT.

10. PROVIDE CONTINUOUS HORIZONTAL JOINT REINFORCEMENT AT 16"o.c., U.O.N. THE REINFORCEMENT SHALL BE STANDARD DUTY LADDER-TYPE WITH 9 GAUGE DIAMETER SIDE RODS AND 9 GAUGE CROSS RODS. FINISH SHALL BE HOT DIPPED GALVANIZED AFTER FABRICATION (ASTM A 153, CLASS B2, 1.50 OZ./SQ. FT).
ALL CORNERS AND INTERSECTIONS SHALL BE REINFORCED WITH PRE-FABRICATED 'L' AND 'T' SHAPED ASSEMBLIES. NO SITE-CUT REINFORCEMENT IS ALLOWED. SEE SPECIFICATIONS FOR ADDITIONAL REQUIREMENTS.

11. REINFORCEMENT IN CMU DESIGNATED AS CONTINUOUS SHALL LAP 48 BAR DIAMETERS, U.O.N.

12. PROVIDE CORNER BARS, 48 BAR DIAMETERS x 48 BAR DIAMETERS, AT EACH BOND BEAM CHANGE OF DIRECTION.

13. UNLESS OTHERWISE SHOWN, MASONRY WALLS SHALL HAVE CONTROL JOINTS AT A MAXIMUM SPACING OF 25'-4" ON CENTER. THE JOINT SHALL BE FORMED USING PVC MATERIAL CONFORMING TO ASTM D2287, TYPE PVC 654-4. COORDINATE LOCATION OF JOINTS WITH THE ARCHITECTURAL ELEVATIONS.

SL - STRUCTURAL LUMBER

1. ALL STRUCTURAL LUMBER SHALL CONFORM TO THE MOST CURRENT APPLICABLE SPECIFICATIONS OF THE AMERICAN INSTITUTE OF TIMBER CONSTRUCTION.

2. ALL STRUCTURAL LUMBER SHALL BE A MINIMUM OF NO. 2, SOUTHERN YELLOW PINE (SYP#2), WITH MAXIMUM MOISTURE CONTENT OF 19%, UNLESS OTHERWISE NOTED. WALL STUDS MAY BE NO. 2, SPRUCE-PINE-FIR (SPF#2), UNLESS OTHERWISE NOTED.

3. ALL LUMBER NOTED "PRESSURE TREATED" (P.T.) SHALL BE PRESSURE TREATED WITH WATER-BORNE PRESERVATIVES. PRESSURE TREATMENT SHALL COMPLY WITH REQUIREMENTS AWPA STANDARD U1.

4. METAL CONNECTORS USED TO SUPPORT PRESSURE-TREATED WOOD MEMBERS SHALL HAVE A ZINC COATING CONFORMING TO THE REQUIREMENTS OF A G185 COATING (1.85 OZ/FT^2). THIS CONFORMS TO THE SIMPSON TYPE ZMAX FINISH. ALL FASTENERS USED WITH THESE CONNECTORS SHALL CONFORM TO THE EQUIVALENT G185 COATING.

5. PROVIDE NAILING PATTERN IN COMPLIANCE WITH THE NORTH CAROLINA STATE BUILDING CODE RECOMMENDED FASTENING SCHEDULE WHEN JOINING TWO OR MORE FRAMING MEMBERS. PROVIDE FLOOR AND ROOF BRIDGING IN ACCORDANCE WITH THE NCSBC.

6. STRUCTURAL FLOOR SHEATHING SHALL BE A MINIMUM OF 23/32 APA RATED T&G SHEATHING. SECURE TO SUPPORTING FRAMING WITH SCREWS & CONSTRUCTION ADHESIVE IN ACCORDANCE WITH SHEATHING MANUFACTURERS INSTRUCTIONS.

7. STRUCTURAL WALL SHEATHING SHALL BE A MINIMUM OF 15/32 APA RATED SHEATHING, EXPOSURE 1. INSTALL SHEATHING WITH 10d (0.148"x 3") NAILS AT 3"o.c. EDGES AND 6"o.c. FIELD. FURNISH 2X HORIZONTAL BLOCKING AT PANEL JOINTS.

8. STRUCTURAL ROOF SHEATHING SHALL BE A MINIMUM OF 19/32 APA RATED SHEATHING, EXPOSURE 1. INSTALL SHEATHING WITH 8d (0.113"X 2-1/2") NAILS AT 6"o.c. EDGES AND FIELD. FURNISH 2X HORIZONTAL BLOCKING AT PANEL JOINTS. ALLOW 1/8" SPACE BETWEEN PANEL ENDS & EDGES TYP.

9. THE CONTINUOUS '2x' SILL PLATE AT THE BASE OF THE WOOD STUD WALL SHALL BE ATTACHED TO THE SUPPORTING CONCRETE/STEEL USING POWDER-ACTUATED FASTENERS: RAMSET MODEL 1524SDE WITH 7/8" WASHER, 3" LENGTH, 0.145 SHANK DIAMETER, 1-1/2" PENETRATION, OR AN APPROVED EQUIVALENT.

10. TYPICAL NOTE FOR STUD PACKS IN WALLS & STRUCTURAL BLOCKING:
STUD PACKS SHALL BE PROVIDED AT EACH LEVEL DOWN TO THE FOUNDATION WALL INCLUDING THE BAND REGION AT EACH FLOOR LEVEL. PROVIDE 2x SOLID BLOCKING IN FLOOR CAVITIES DIRECTLY UNDER POINT LOADS AND TERMINATING AT STRUCTURAL BEAMS, HEADERS OR FOUNDATION WALLS.

11. ENGINEERED STRUCTURAL WOOD PRODUCTS (i.e. PSL, LVL) SHALL HAVE THE MINIMUM STRUCTURAL PROPERTIES:

	PSL	LVL	PSL COL
• FLEXURAL STRESS (Fb):	2,900 PSI	2,600 PSI	2,400 PSI
• MODULUS OF ELASTICITY (E):	2,000 KSI	2,000 KSI	1,800 KSI
• F_C PERPENDICULAR:	750 PSI	750 PSI	425 PSI
• F_C PARALLEL	2,900 PSI	2,510 PSI	2,500 PSI
• F_V:	290 PSI	285 PSI	190 PSI.

WT - PREFABRICATED WOOD TRUSSES

1. PROVIDE WHERE SHOWN. COMPLY WITH APPLICABLE REQUIREMENTS OF NFPA "NATIONAL DESIGN SPECIFICATIONS FOR STRESS GRADED LUMBER AND ITS FASTENINGS", AND THE TRUSS PLATE INSTITUTE'S ANSI/TPI-1 "NATIONAL DESIGN STANDARD FOR METAL-PLATE-CONNECTED WOOD TRUSS CONSTRUCTION". SHOP-ASSEMBLE TRUSSES IN A PLANT OF A RECOGNIZED MANUFACTURER OF WOOD TRUSSES, OR IN A PLANT OF A FABRICATOR LICENSED BY SUCH A MANUFACTURER. STORE, HANDLE AND ERECT TRUSSES IN ACCORDANCE WITH THE MANUFACTURER'S PRINTED INSTRUCTIONS, HIB-91 "HANDLING, INSTALLING & BRACING" AND DSB-89 "TEMPORARY BRACING OF M.P.C.'ED WOOD TRUSSES" AS PUBLISHED BY THE TPI. SUBMIT SHOP DRAWINGS WHICH INCLUDE THE FOLLOWING ITEMS:
- SIZES, SLOPES, SPANS, AND SPACING OF TRUSSES
- DESIGN LOADS
- BEARING WIDTH
- DESIGN STRESSES IN EACH MEMBER
- REACTIONS
- CONNECTION PLATE TYPE, THICKNESS, SIZE, AND DIMENSIONED LOCATION
- LUMBER SIZE, SPECIES, AND GRADE FOR EACH MEMBER
- DEFLECTION
- CAMBER
- TEMPORARY AND PERMANENT BRACING FRAMING
- SEAL OF A PROFESSIONAL ENGINEER LICENSED TO PRACTICE IN NORTH CAROLINA.

2. TIE DOWN ANCHORS: FURNISH AND INSTALL ONE HURRICANE/SEISMIC ANCHOR AT EACH END OF EACH ROOF TRUSS, U.O.N.

3. OVERBUILD: SHALL CONSIST OF GABLED END-TYPE TRUSSES SPACED AT 24"o.c. INSTALL PLYWOOD SHEATHING TO SPANNING TRUSSES OR WOOD JOISTS PRIOR TO INSTALLING 'OVERBUILD'.

4. TRUSS HANGERS: AT EACH TRUSS END THAT DOES NOT HAVE A STANDARD BEARING CONNECTION, PROVIDE A METAL JOIST HANGER THAT IS CAPABLE OF SUPPORTING THE REQUIRED REACTION. HANGER MANUFACTURER AND MODEL SHALL BE INDICATED ON THE SHOP DRAWINGS. TOE NAILING IS NOT ACCEPTABLE.

5. ROOF TRUSS DESIGN LOADS:
TOP CHORD:
LIVE LOAD 20 PSF
DEAD LOAD 10 PSF
GROUND SNOW LOAD 15 PSF
BOTTOM CHORD:
LIVE LOAD 10 PSF
DEAD LOAD 10 PSF
MAXIMUM LOAD DURATION FACTORS 1.00 LIVE LOADS
1.15 SNOW LOADS
1.6 WIND/SEISMIC LOADS
SEE THE "GENERAL" SECTION OF THE STRUCTURAL NOTES FOR WIND AND SEISMIC REQUIREMENTS.

6. THE ROOF SHEATHING SHALL BE ATTACHED TO THE SUPPORTING TRUSSES, FRAMING AND/OR BLOCKING USING 8d NAILS AS FOLLOWS:
TYPICAL 4' x 8' PANEL:
ENDS 6"o.c.
INTERMEDIATE SUPPORTS 12"o.c.
PERIMETER EDGES OF BUILDING 6"o.c.

MI - MISCELLANEOUS ITEMS

1. GROUT FOR SETTING BEARING SURFACES SHALL BE NON-SHRINK, EQUAL TO "MASTERFLOW 928" AS MANUFACTURED BY BASF.

2. WALLS RETAINING EARTH, OTHER THAN WALLS DESIGNED AS CANTILEVERS, SHALL BE ADEQUATELY BRACED UNTIL CONCRETE FOR THE SUPPORTING SLABS HAS BEEN PLACED AND SUFFICIENTLY CURED.

3. UNLESS SPECIFICALLY SHOWN OR NOTED ON THE DRAWINGS, NO STRUCTURAL MEMBER SHALL BE CUT, NOTCHED, BORED, OR OTHERWISE WEAKENED WITHOUT THE PERMISSION OF THE STRUCTURAL ENGINEER.

4. CONTRACTOR SHALL VERIFY ALL OPENING SIZES AND LOCATIONS WITH THE MECHANICAL EQUIPMENT SUPPLIER'S DRAWINGS AND ARCHITECTURAL DRAWINGS.

PA - POST INSTALLED ANCHORS

1. UNLESS OTHERWISE INDICATED ON PLANS, POST-INSTALLED ANCHORS SHALL CONSIST OF THE FOLLOWING ANCHOR TYPES, OR APPROVED EQUAL:

BASE MATERIAL	ADHESIVE ANCHOR	MECHANICAL ANCHOR
SOLID CONCRETE	HILTI -RE 500 V3 HILTI HY 200 SAFE SET SYSTEM	HILTI KWIK HUS EZ SCREW ANCHOR HILTI KWIK BOLT TZ EXPANSION ANCHOR
GROUTED MASONRY	HILTI HY 70	HILTI KWIK HUS EZ SCREW ANCHOR HILTI KWIK BOLT III EXPANSION ANCHOR
HOLLOW MASONRY	HILTI HY 70 WITH APPROPRIATE SCREEN TUBE	HILTI HY HLC SLEEVE ANCHOR

2. SUBSTITUTION REQUESTS FOR ALTERNATE PRODUCTS MUST BE APPROVED IN WRITING BY THE STRUCTURAL ENGINEER OF RECORD PRIOR TO USE. SUBSTITUTIONS WILL BE EVALUATED BY THEIR HAVING AN ICC ESR REPORT SHOWING COMPLIANCE WITH THE RELEVANT BUILDING CODE.

3. INSTALL ANCHORS IN ACCORDANCE WITH THE MANUFACTURER'S WRITTEN INSTRUCTIONS. ANCHOR CAPACITY IS DEPENDENT UPON SPACING BETWEEN ADJACENT ANCHORS AND PROXIMITY OF ANCHORS TO EDGE OF CONCRETE. INSTALL ANCHORS IN ACCORDANCE WITH SPACING AND EDGE CLEARANCES INDICATED ON THE DRAWINGS.

4. ANCHOR CAPACITY IS DEPENDANT ON SPACING BETWEEN ADJACENT ANCHORS AND PROXIMITY OF ANCHORS TO EDGE OF CONCRETE. INSTALL ANCHORS IN ACCORDANCE WITH SPACING AND EDGE CLEARANCES INDICATED ON THE DRAWINGS.

TA - TYPICAL ABBREVIATIONS

1. THE FOLLOWING ARE TYPICAL ABBREVIATIONS USED IN THE STRUCTURAL DRAWINGS:

A.B.	-ANCHOR BOLT	H.S.	-HEADED STUD
ADD'L	-ADDITIONAL	JST.	-JOIST
ARCH'L	-ARCHITECTURAL	JT.	-JOINT
BM	-BEAM	LT.	-LIGHT
BP	-BASE PLATE	MAS.	-MASONRY
BRG.	-BEARING	MAX.	-MAXIMUM
BSMT.	-BASEMENT	MECH.	-MECHANICAL
C.I.P.	-CAST IN PLACE	MFR	-MANUFACTURER
C.J.	-CONTROL OR CONSTRUCTION JOINT	MIN.	-MINIMUM
CLR.	-CLEAR	NOM.	-NOMINAL
CMU	-CONCRETE MASONRY UNIT	NTS	-NOT TO SCALE
COL.	-COLUMN	O.H.	-OPPOSITE HAND
CONC.	-CONCRETE	O.C.	-ON CENTER
CONST.	-CONSTRUCTION	PC	-PRECAST OR PILE CAP
CONT.	-CONTINUOUS	PREFAB.	-PREFABRICATED
COORD.	-COORDINATE	REF.	-REFERENCE
DET.	-DETAIL	REINF.	-REINFORCEMENT
DIA	-DIAMETER	SECT.	-SECTION
DWG.	-DRAWING	SIM.	-SIMILAR
E.B.	-EXPANSION BOLT	STD.	-STANDARD
EL.	-ELEVATION	STRUCT.	-STRUCTURAL
F.F.	-FINISHED FLOOR	T.O.S.	-TOP OF SLAB OR STEEL
FIN.	-FINISH(ED)	TYP.	-TYPICAL
FLR.	-FLOOR	U.O.N.	-UNLESS OTHERWISE NOTED
FOUND.	-FOUNDATION	V.I.F.	-VERIFY IN FIELD
FTG.	-FOOTING	VERT.	-VERTICAL
GALV.	-GALVANIZE (D) (ING)	W.P.	-WORK POINT
H.C.	-HOLLOW-CORE	WT.	-WEIGHT
HORIZ.	-HORIZONTAL	W.W.R.	-WELDED WIRE REINF.
HDG	-HOT-DIP GALVANIZED		

COMPONENTS & CLADDING EXTERNAL PRESSURE LOADS (PSF)

EFFECTIVE WIND AREA (FT^2)		BASED ON ULTIMATE WIND SPEEDS (V = 115 MPH FOR RISK CAT II)				
		1	2	3	4	5
WALLS & ROOF	< 10	16.0 / -24.9	16.0 / -41.8	16.0 / -62.9	22.8 / -24.7	22.8 / -30.4
	20	16.0 / -24.7	16.0 / -40.1	16.0 / -58.9	22.7 / -24.6	22.7 / -30.2
	50	16.0 / -23.9	16.0 / -35.2	16.0 / -46.9	22.3 / -24.2	22.3 / -29.3
	>100	16.0 / -22.8	16.0 / -27.0	16.0 / -27.0	21.7 / -23.6	21.7 / -28.1
	>500	-	-	-	17.1 / -19.0	17.1 / -19.0

NOTES:
1. 'a' = 10'-0"
2. POSITIVE PRESSURE VALUES REFER TO FORCES ACTING TOWARD BUILDING. NEGATIVE PRESSURE VALUES REFER TO FORCES ACTING AWAY FROM BUILDING.
3. EACH COMPONENT MUST BE DESIGNED FOR MAXIMUM POSITIVE AND NEGATIVE FORCES.
4. FOR COMPONENTS HAVING EFFECTIVE AREAS IN BETWEEN TABULATED VALUES, DESIGN LOADS MUST BE INTERPOLATED. OTHERWISE DESIGN LOAD MUST BE TAKEN FROM THE NEXT LOWEST EFFECTED AREA.

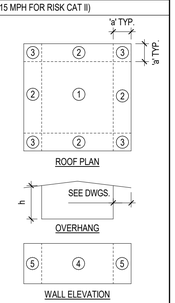

BUNCOMBE COUNTY SPORTS PARK
RESTROOM BUILDING

58 APAC DRIVE
ASHEVILLE, NC

Prepared For
BUNCOMBE COUNTY

DOMOKUR | ARCHITECTS

4651 Medina Road
Akron, Ohio 44321-1315
p 330.666.7878

43 South Broad Street, Suite 201
Brevard, North Carolina 28712-3738
p 828.884.8478

www.domokur.com

PRELIMINARY - DO NOT USE FOR CONSTRUCTION

KLOESEL Engineering, PA
License C-1207
8 Magnolia Avenue, Suite 100
Asheville, North Carolina 28801
(828) 255-0780

Issue	Date	Description
1	11/17/2023	Issue for Bid and Permit

STRUCTURAL NOTES

Project No: 230828
Project Manager: DBP
Drawn By: DBC

S000

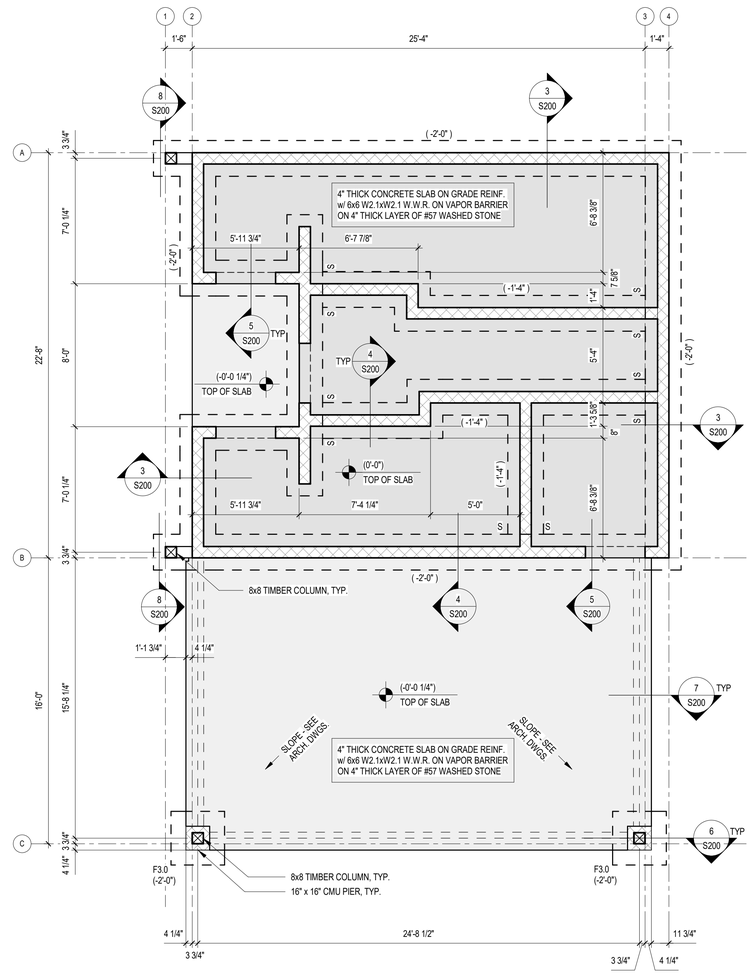

FOUNDATION PLAN
1/4" = 1'-0"

BUNCOMBE COUNTY SPORTS PARK
RESTROOM BUILDING

58 APAC DRIVE
ASHEVILLE, NC

Prepared For
BUNCOMBE COUNTY

DOMOKUR | ARCHITECTS

4651 Medina Road
Akron, Ohio 44321-1315
p 330.666.7878

43 South Broad Street, Suite 201
Brevard, North Carolina 28712-3738
p 828.884.8478
www.domokur.com

PRELIMINARY - DO NOT USE FOR CONSTRUCTION

KLOESEL
Engineering, PA
License C-1207
8 Magnolia Avenue, Suite 100
Asheville, North Carolina 28801
(828) 255-0780

Issue	Date	Description
1	11/17/2023	Issue for Bid and Permit

FOUNDATION PLAN

Project No: 230828
Project Manager: DBP
Drawn By: DBC

S100

11/16/2023 11:43:09 AM C:\Users\Daniel.Conover\Documents\230828 Buncombe RR-S23-2_danielLXA6V.rvt

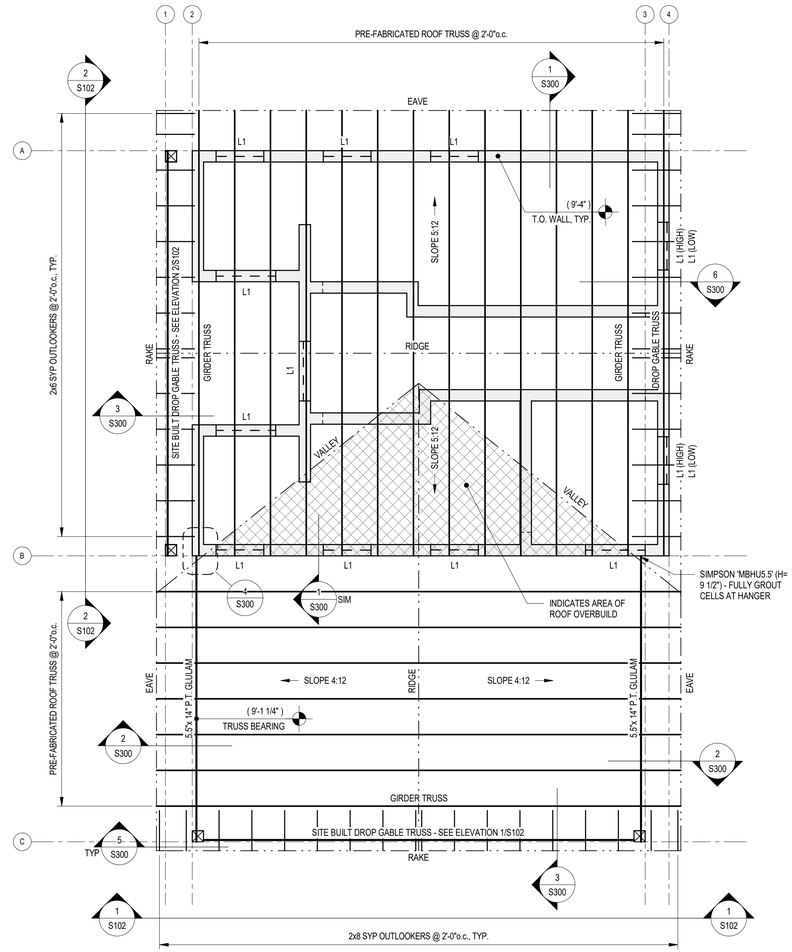

ROOF FRAMING PLAN
1/4" = 1'-0"

BUNCOMBE COUNTY SPORTS PARK
RESTROOM BUILDING

58 APAC DRIVE
ASHEVILLE, NC

Prepared For
BUNCOMBE COUNTY

DOMOKUR | ARCHITECTS

4651 Medina Road
Akron, Ohio 44321-1315
p 330.666.7878

43 South Broad Street, Suite 201
Brevard, North Carolina 28712-3738
p 828.884.8478

www.domokur.com

PRELIMINARY - DO NOT USE FOR CONSTRUCTION

KLOESEL
Engineering, PA
License C-1207
8 Magnolia Avenue, Suite 100
Asheville, North Carolina 28801
(828) 255-0780

Issue	Date	Description
1	11/17/2023	Issue for Bid and Permit

ROOF FRAMING PLAN

Project No: 230828
Project Manager: DBP
Drawn By: DBC

S101

11/16/2023 11:43:09 AM C:\Users\Daniel.Conover\Documents\230828 Buncombe RR-S23-2_danielLXA8V.rvt

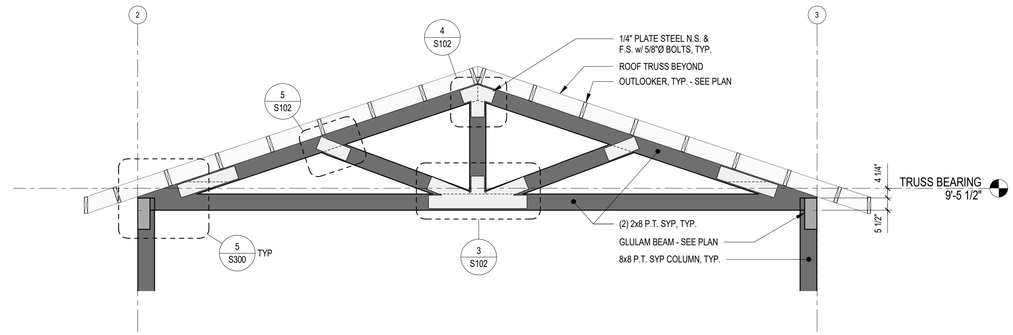

1 / S102 SITE BUILT DROP GABLE TRUSS ELEVATION - A
3/8" = 1'-0"

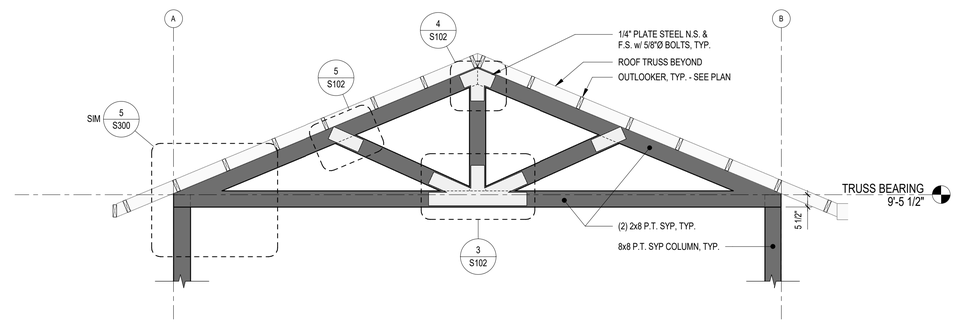

2 / S102 SITE BUILT DROP GABLE TRUSS ELEVATION - B
3/8" = 1'-0"

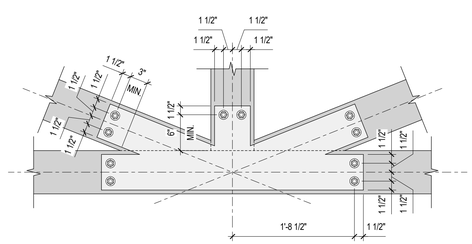

3 / S102 PLATE DETAIL - A
1" = 1'-0"

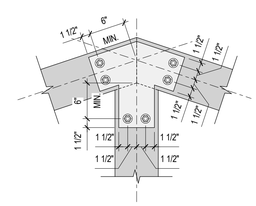

4 / S102 PLATE DETAIL - B
1" = 1'-0"

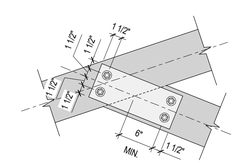

5 / S102 PLATE DETAIL - C
1" = 1'-0"

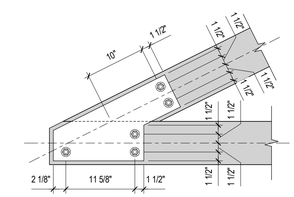

6 / S102 PLATE DETAIL - D
1" = 1'-0"

BUNCOMBE COUNTY SPORTS PARK
RESTROOM BUILDING

58 APAC DRIVE
ASHEVILLE, NC

Prepared For
BUNCOMBE COUNTY

DOMOKUR | ARCHITECTS

4651 Medina Road
Akron, Ohio 44321-1315
p 330.666.7878

43 South Broad Street, Suite 201
Brevard, North Carolina 28712-3738
p 828.884.8478

www.domokur.com

PRELIMINARY - DO NOT USE FOR CONSTRUCTION

KLOESEL
Engineering, PA
License C-1207
8 Magnolia Avenue, Suite 100
Asheville, North Carolina 28801
(828) 255-0780

Issue	Date	Description
1	11/17/2023	Issue for Bid and Permit

SITE BUILT TRUSS ELEVATIONS

Project No: 230828
Project Manager: DBP
Drawn By: DBC

S102

11/16/2023 11:43:11 AM C:\Users\Daniel.Conover\Documents\230828 Buncombe RR-S23-2_danielLXA8V.rvt

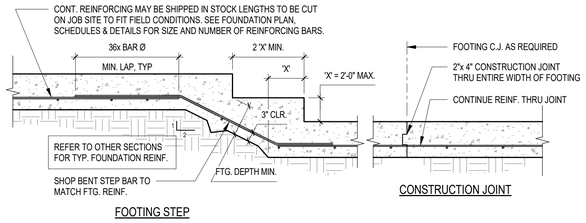

1 / S200 TYP. FOOTING STEP & FOOTING CONSTRUCTION JOINT
1/2" = 1'-0"

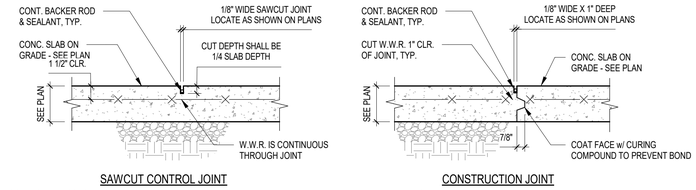

CONTROL AND CONSTRUCTION JOINT NOTES:

1. SAWCUT JOINTS AT CONTROL JOINTS SHALL BE MADE AS SOON AS THE CONCRETE HAS HARDENED SUFFICIENTLY TO PREVENT RAVELING OUT OF THE AGGREGATE AND DAMAGE TO THE EDGES, BUT NO LATER THAN 24 HOURS AFTER FINISHING OF THE SLAB SURFACE HAS BEEN COMPLETED.
2. SAWCUT JOINTS SHALL BE AT ALL CONSTRUCTION JOINTS. JOINTS SHALL BE SAWCUT WHEN CONTROL JOINTS ARE SAWCUT.

NOTE:
FORM KEYWAY USING WOOD FORM NAILED TO BULKHEAD "DO NOT USE METAL KEYWAY"

2 / S200 SLAB ON GRADE JOINT DETAILS
1 1/2" = 1'-0"

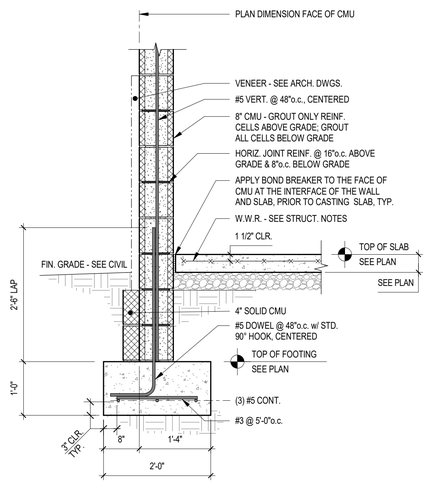

3 / S200 EXT. 8" CMU WALL FOOTING w/ VENEER
3/4" = 1'-0"

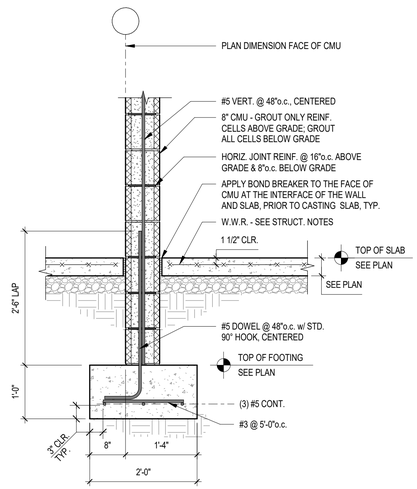

4 / S200 INT. 8" CMU WALL FOOTING
3/4" = 1'-0"

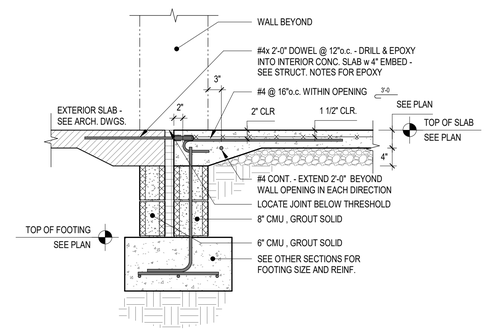

5 / S200 EXT. DOOR SECTION
3/4" = 1'-0"

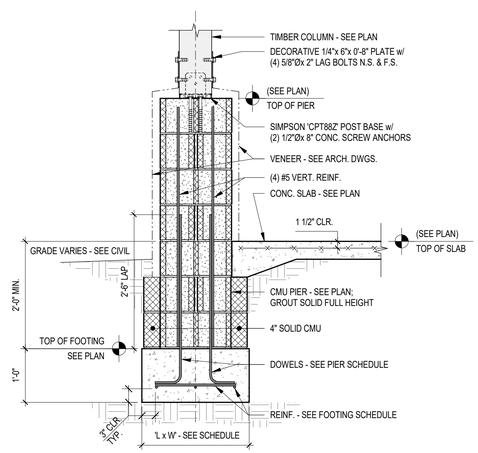

6 / S200 INT. CMU PIER ON FOOTING
3/4" = 1'-0"

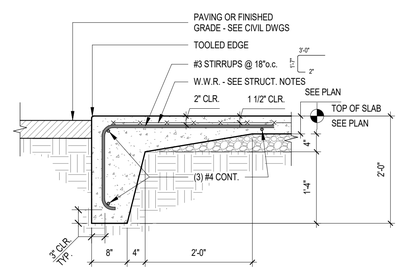

7 / S200 8" THICKEND SLAB EDGE
3/4" = 1'-0"

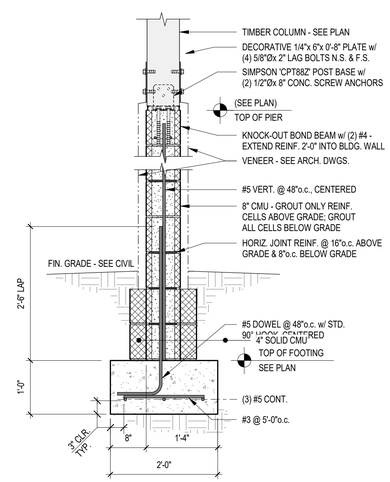

8 / S200 8" CMU KNEE WALL FOOTING w/ COLUMN
3/4" = 1'-0"

BUNCOMBE COUNTY SPORTS PARK
RESTROOM BUILDING

58 APAC DRIVE
ASHEVILLE, NC

Prepared For
BUNCOMBE COUNTY

DOMOKUR | ARCHITECTS

4651 Medina Road
Akron, Ohio 44321-1315
p 330.666.7878

43 South Broad Street, Suite 201
Brevard, North Carolina 28712-3738
p 828.884.8478

www.domokur.com

PRELIMINARY - DO NOT USE FOR CONSTRUCTION

KLOESEL Engineering, PA
License C-1207
8 Magnolia Avenue, Suite 100
Asheville, North Carolina 28801
(828) 255-0780

Issue	Date	Description
1	11/17/2023	Issue for Bid and Permit

FOUNDATION SECTIONS & DETAILS

Project No: 230828
Project Manager: DBP
Drawn By: DBC

S200

11/16/2023 11:43:11 AM C:\Users\Daniel.Conover\Documents\230828 Buncombe RR-S23-2_danielLXA8V.rvt

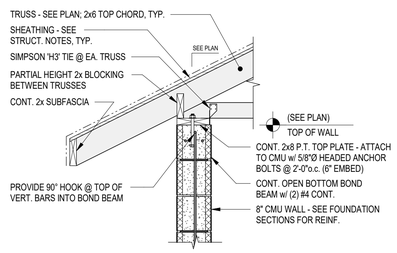

1 / S300 TRUSS BEARING - A
3/4" = 1'-0"

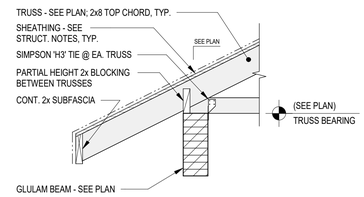

2 / S300 TRUSS BEARING - B
3/4" = 1'-0"

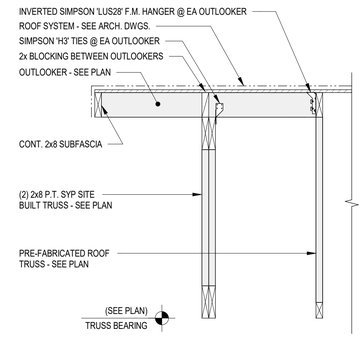

3 / S300 DROP GABLE FRAMING
3/4" = 1'-0"

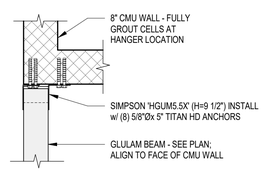

4 / S300 GLULAM PLAN DETAIL
3/4" = 1'-0"

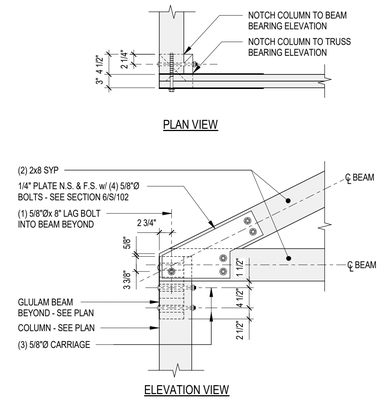

5 / S300 TRUSS BEARING - C
3/4" = 1'-0"

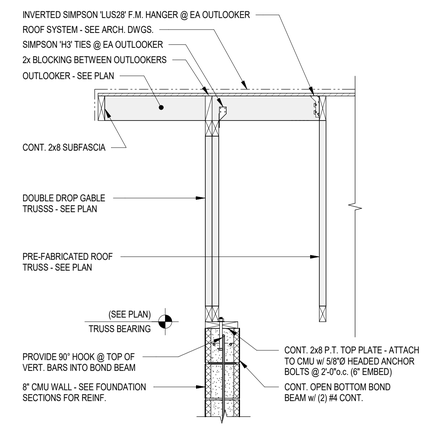

6 / S300 DROP GABLE FRAMING AT CMU
3/4" = 1'-0"

BUNCOMBE COUNTY SPORTS PARK
RESTROOM BUILDING

58 APAC DRIVE
ASHEVILLE, NC

Prepared For
BUNCOMBE COUNTY

DOMOKUR | ARCHITECTS

4651 Medina Road
Akron, Ohio 44321-1315
p 330.666.7878

43 South Broad Street, Suite 201
Brevard, North Carolina 28712-3738
p 828.884.8478
www.domokur.com

PRELIMINARY - DO NOT USE FOR CONSTRUCTION

KLOESEL Engineering, PA
License C-1207
8 Magnolia Avenue, Suite 100
Asheville, North Carolina 28801
(828) 255-0780

Issue	Date	Description
1	11/17/2023	Issue for Bid and Permit

ROOF FRAMING SECTIONS & DETAILS

Project No: 230828
Project Manager: DBP
Drawn By: DBC

S300

11/16/2023 11:43:12 AM C:\Users\Daniel.Conover\Documents\230828 Buncombe RR-S23-2_danielLXA8V.rvt

PIER SCHEDULE				
MARK	PIER SIZE	PIER TYPE	VERTICAL BARS	TIES
P1	2'-4" x 1'-4"	TYPE 1	(4) #4	

PIER NOTES:

1. SEE SECTION1/S400 FOR PIER TYPES.

SPREAD FOOTING SCHEDULE		
MARK	FOOTING SIZE	REINFORCING
F2.0	2'-0" x 2'-0" x 1'-0"	(3) #4 EA. WAY BOTTOM
F3.0	3'-0" x 3'-0" x 1'-0"	(4) #4 EA. WAY BOTTOM
F4.0	4'-0" x 4'-0" x 1'-0"	(5) #4 EA. WAY BOTTOM

WOOD COLUMN SCHEDULE			
MARK	COLUMN SIZE	BASE	COMMENTS
C1	8x8 P.T. SYP	SIMPSON 'ABU88-Z'	

LINTEL SCHEDULE						
MARK	LINTEL TYPE	MATERIAL	SIZE (W x D)	REINFORCING	STRUCTURAL STEEL	COMMENTS
L1	TYPE 1	MASONRY	8" x 8"	(2) #4 CONT.		

LINTEL NOTES:

1. REINFORCEMENT FOR MASONRY LINTELS SHALL EXTEND 2'-0" BEYOND THE FACE OF EACH OPENING.
2. SEE SECTION 2/S400 FOR LINTEL TYPES.

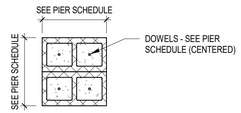

TYPE 1

1 / S400 PIER TYPES
3/4" = 1'-0"

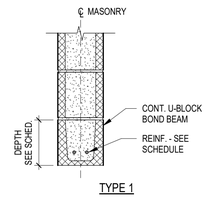

TYPE 1

2 / S400 LINTEL TYPES
1" = 1'-0"

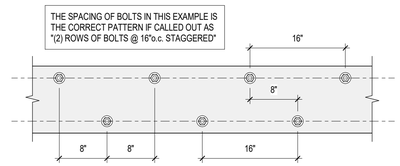

3 / S400 TYPICAL BOLT STAGGER PATTERN DETAIL
1" = 1'-0"

BUNCOMBE COUNTY SPORTS PARK
RESTROOM BUILDING

58 APAC DRIVE
ASHEVILLE, NC

Prepared For
BUNCOMBE COUNTY

DOMOKUR | ARCHITECTS

4651 Medina Road
Akron, Ohio 44321-1315
p 330.666.7878

43 South Broad Street, Suite 201
Brevard, North Carolina 28712-3738
p 828.884.8478

www.domokur.com

PRELIMINARY - DO NOT USE FOR CONSTRUCTION

KLOESEL
Engineering, PA
License C-1207
8 Magnolia Avenue, Suite 100
Asheville, North Carolina 28801
(828) 255-0780

Issue	Date	Description
1	11/17/2023	Issue for Bid and Permit

SCHEDULES & MISC. DETAILS

Project No: 230828
Project Manager: DBP
Drawn By: DBC

S400

11/16/2023 11:43:12 AM C:\Users\Daniel.Conover\Documents\230828 Buncombe RR-S23-2_danielLXA6V.rvt

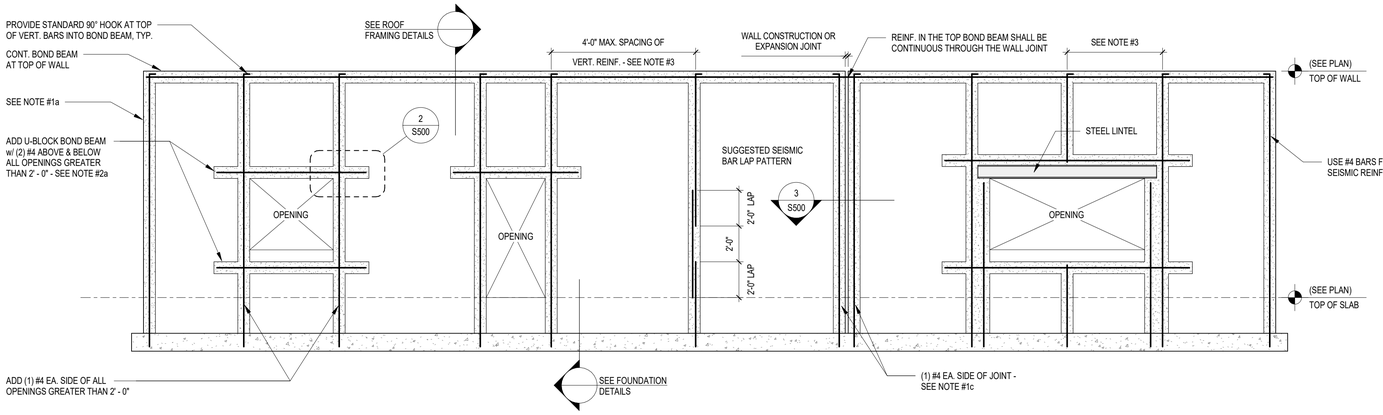

1 / S500 EXAMPLE ELEVATION OF MINIMUM CMU SEISMIC REINFORCING
1/4" = 1'-0"

SEISMIC REINFORCING NOTES:

1. ALL MASONRY SHALL BE VERTICALLY REINFORCED CONTINUOUSLY FROM SUPPORT TO SUPPORT:
   a) AT EACH CORNER
   b) AT EACH SIDE OPENING
   c) AT WALL ENDS
   WALLS SHALL BE REINFORCED WITH BAR SIZES NOTED IN ELEVATION ABOVE AT THESE LOCATIONS UNLESS OTHERWISE NOTED IN OTHER SECTIONS AND DETAILS.
2. HORIZONTAL BOND BEAMS REINFORCED AS NOTED IN SECTIONS OR LINTEL SCHEDULE SHALL BE FURNISHED:
   a) AT THE BOTTOM AND TOP OF ALL WALL OPENINGS GREATER THAN 2'-0" AND SHALL EXTEND NOT LESS THAN 2'-0" PAST OPENING OR STEEL LINTEL BEARING
   b) CONTINUOUSLY AT STRUCTURALLY CONNECTED ROOF AND FLOOR LEVELS AND AT THE TOP OF ALL WALLS
   c) IN THE TOP OF THE FOUNDATION
3. WHERE REINFORCING REQUIREMENTS IN NOTES #1 & #2 ABOVE LEAVE SPACING BETWEEN VERTICAL BARS GREATER THAN 4'-0", ADD BARS AS NOTED IN ELEVATION ABOVE @ 4'-0"o.c. IN NO CASE SHALL ANY WALL HAVE VERTICAL REINFORCING SPACED GREATER THAN 4'-0"o.c.
4. WHERE DETAILS SHOWN ON OTHER SHEETS NOTE REINFORCING OF GREATER SIZE AND / OR CLOSER SPACING, THE REINFORCING REQUIREMENTS IN SAID DETAIL SHALL GOVERN. THE SEISMIC REINFORCING NOTED AT WALL OPENINGS, CORNERS, & ENDS SHALL BE IN ADDITION TO REINFORCING IN OTHER DETAILS.

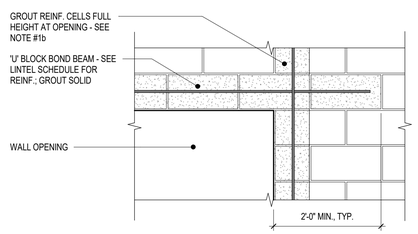

2 / S500 SEISMIC REINF. AT MASONRY LINTEL
3/4" = 1'-0"

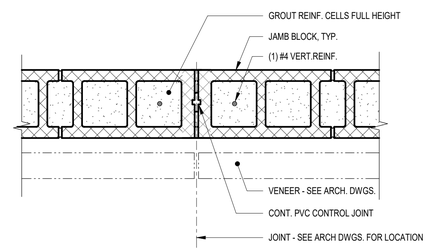

3 / S500 CONTROL JOINT - PLAN VIEW
1 1/2" = 1'-0"

BUNCOMBE COUNTY SPORTS PARK
RESTROOM BUILDING

58 APAC DRIVE
ASHEVILLE, NC

Prepared For
BUNCOMBE COUNTY

DOMOKUR | ARCHITECTS

4651 Medina Road
Akron, Ohio 44321-1315
p 330.666.7878

43 South Broad Street, Suite 201
Brevard, North Carolina 28712-3738
p 828.884.8478

www.domokur.com

PRELIMINARY - DO NOT USE FOR CONSTRUCTION

KLOESEL
Engineering, PA
License C-1207
8 Magnolia Avenue, Suite 100
Asheville, North Carolina 28801
(828) 255-0780

Issue	Date	Description
1	11/17/2023	Issue for Bid and Permit

SEISMIC SHEET

Project No: 230828
Project Manager: DBP
Drawn By: DBC

S500

11/16/2023 11:43:13 AM C:\Users\Daniel.Conover\Documents\230828 Buncombe RR-S23-2_danielLXA6V.rvt

SECTION 013300 - SUBMITTAL PROCEDURES

SUBMIT AT A MINIMUM THE PRODUCT DATA, SAMPLES, DIGITAL SHOP DRAWINGS (AS APPLICABLE), AND WARRANTIES FOR EACH OF THE MATERIALS/SYSTEMS TO BE INSTALLED INCLUDING BUT NOT LIMITED TO THE FOLLOWING.

- A. CONCRETE
- B. CONCRETE FINISHES
- C. CONCRETE REINFORCEMENT
- D. MASONRY AND ACCESSORIES
- E. MANUFACTURED STONE VENEER
- F. STRUCTURAL LUMBER
- G. PREFABRICATED WOOD TRUSSES
- H. WATERPROOFING
- I. ASPHALT SHINGLES
- J. FORMED METAL WALL PANELS
- K. SOFFIT PANELS
- L. SHEET METAL FLASHING AND TRIM
- M. JOINT SEALANTS
- N. HOLLOW METAL DOORS AND FRAMES
- O. DOOR HARDWARE
- P. EXTERIOR PAINTING
- Q. STAINING AND TRANSPARENT FINISHING

REFER TO DISCIPLINE DRAWINGS AND SPECIFIATIONS FOR DETAILED SUBMITTAL REQUIREMENTS.

PROVIDE MOCK-UPS WHERE INDICATED AND RECEIVE APPROVAL PRIOR TO PROCEDING WITH INSTALLATION OF THE ASSOCIATED SYSTEM

SECTION 016000 - PRODUCT REQUIREMENTS

PROVIDE PRODUCTS THAT COMPLY WITH THE CONTRACT DOCUMENTS, ARE UNDAMAGED AND ARE NEW AT TIME OF INSTALLATION.

PROVIDE PRODUCTS COMPLETE WITH ACCESSORIES, TRIM, FINISH, FASTENERS, AND OTHER ITEMS NEEDED FOR A COMPLETE INSTALLATION AND INDICATED USE AND EFFECT.

WHERE THE CONTRACT DOCUMENTS NAME A BASIS OF DESIGN WITH COMPARABLE MANUFACTURERS, PROVIDE THE NAMED PRODUCT THAT COMPLIES WITH REQUIREMENTS. COMPARABLE PRODUCTS OR SUBSTITUTIONS FOR CONTRACTOR'S CONVENIENCE WILL NOT BE CONSIDERED WITHOUT OWNER APPROVAL.

UNLESS INDICATED OTHERWISE SEE FINISH SCHEDULE FOR SPECIFIC PRODUCTS USED.

SEE SECTION 013300 - SUBMITTAL PROCEDURES FOR LIST OF PRODUCTS REQUIRING SUBMITTALS.

DELIVERY, STORAGE, AND HANDLING SHALL BE PER MANUFACTURER'S REQUIREMENTS.

COMPLY WITH MANUFACTURER'S INSTRUCTIONS AND RECOMMENDATIONS FOR TRANSPORTATION, DELIVERY AND HANDLING. TRANSPORT PRODUCTS BY METHODS TO AVOID PRODUCT DAMAGE AND PROMPTLY INSPECT PRODUCTS ON DELIVERY TO ENSURE THAT PRODUCTS COMPLY WITH CONTRACT DOCUMENTS, QUANTITIES ARE CORRECT, AND TO ENSURE THAT PRODUCTS ARE UNDAMAGED AND PROPERLY PROTECTED.

STORE AND PROTECT PRODUCTS IN ACCORDANCE WITH MANUFACTURER'S INSTRUCTIONS, WITH SEALS AND LABELS INTACT AND LEGIBLE.

SECTION 017300 - EXECUTION

INSTALL PRODUCTS AND EQUIPMENT PER MANUFACTURER'S WRITTEN INSTRUCTIONS AND APPROVED SHOP DRAWINGS.

BEFORE PROCEEDING WITH EACH COMPONENT OF THE WORK, EXAMINE SUBSTRATES, AREAS, AND CONDITIONS, WITH INSTALLER OR APPLICATOR PRESENT WHERE INDICATED, FOR COMPLIANCE WITH REQUIREMENTS FOR INSTALLATION TOLERANCES AND OTHER CONDITIONS AFFECTING PERFORMANCE. RECORD OBSERVATIONS. IF CONDITIONS ARE FOUND TO BE INCONSISTENT WITH CONSTRUCTION DOCUMENTS BRING THE ISSUE TO THE ATTENTION OF THE ARCHITECT BEFORE PROCEEDING WITH INSTALLATION.

MAINTAIN PROJECT SITE FREE OF WASTE MATERIALS AND DEBRIS.

COMPLY WITH MANUFACTURERS WRITTEN INSTRUCTIONS FOR AMBIENT TEMPERATURE AND RELATIVE HUMIDITY REQUIREMENTS DURING HANDLING, STORAGE, AND INSTALLATION. AFTER INSTALLATION AND UNTIL SUBSTANTIAL COMPLETION, MAINTAIN AMBIENT TEMPERATURES WITHIN RANGE RECOMMENDED BY MANUFACTURER.

IN THE EVENT THAT CONTRACTOR ENCOUNTERS ON THE PROJECT SITE MATERIAL REASONABLY BELIEVED TO BE ASBESTOS, POLYCHLORINATED BIPHENYL (PCB), OR OTHER HAZARDOUS MATERIALS WHICH HAVE NOT BEEN RENDERED HARMLESS, THE CONTRACTOR SHALL IMMEDIATELY STOP WORK IN THE AREA AND CONTACT THE OWNER'S REPRESENTATIVE.

TAKE ALL MEASURES NECESSARY TO PRESERVE AND PROTECT EXISTING AND COMPLETED WORK FREE FROM DAMAGE, DETERIORATION, SOILING AND STAINING, UNTIL ACCEPTANCE BY THE OWNER'S REPRESENTATIVE.

SECTION 017700 - CLOSEOUT PROCEDURES

DEFINITION: SUBSTANTIAL COMPLETION SHALL BE THE DATE ON WHICH ALL WORK, OTHER THAN CORRECTION OF MINOR DEFICIENCIES, IS SUFFICIENTLY COMPLETE AND IN ACCORDANCE WITH THE CONTRACT DOCUMENTS TO THE POINT WHERE ALL REQUIRED INSPECTIONS ARE COMPLETE, THE CERTIFICATE OF OCCUPANCY (AND ALL OTHER ASSOCIATED APPROVALS) HAS BEEN ISSUED, AND THE OWNER IS ABLE TO UTILIZE THE BUILDING(S) OR SPACES(S) FOR THEIR INTENDED PURPOSE.
PRELIMINARY PROCEDURES: BEFORE REQUESTING INSPECTION FOR DETERMINING DATE OF SUBSTANTIAL COMPLETION, COMPLETE AND SUBMIT THE FOLLOWING TO THE ARCHITECT. LIST ITEMS BELOW THAT ARE INCOMPLETE IN REQUEST.

- A. PREPARE A LIST OF ITEMS TO BE COMPLETED AND CORRECTED (PUNCH LIST), THE VALUE OF ITEMS ON THE LIST (STATED IN A DOLLAR AMOUNT VALUE), AND REASONS WHY THE WORK IS NOT COMPLETE. THE ARCHITECT HAS THE OPTION TO REVIEW AND MAKE REVISIONS TO THE VALUES THE CONTRACTOR ASSIGNS TO EACH PUNCH LIST ITEM.
  - 1. THE GENERAL CONTRACTOR SHALL INITIATE AND PREPARE THE WRITTEN PUNCH LIST TO BE ISSUED TO THE OWNER AND ARCHITECT.
  - 2. FAILURE TO INCLUDE AN ITEM ON THE PUNCH LIST DOES NOT ALTER THE RESPONSIBILITY OF THE CONTRACTOR TO COMPLETE ALL WORK IN ACCORDANCE WITH THE CONTRACT DOCUMENTS.
  - 3. ITEMS MAY BE ADDED TO THE PUNCH LIST UNTIL FINAL PAYMENT IS MADE TO THE CONTRACTOR. ITEMS WHICH REQUIRE ATTENTION DURING THE PUNCH LIST COMPLETION PERIOD AND WHICH ARE CONSIDERED BY THE CONTRACTOR TO BE “MAINTENANCE ITEMS” MUST ALSO BE COMPLETED PRIOR TO FINAL COMPLETION.
- B. APPLICATION FOR PAYMENT FOR 100 PERCENT COMPLETION, LESS RETAINAGE AND LESS THE DOLLAR AMOUNT VALUE FOR COMPLETION OF PUNCH LIST ITEMS. THIS MAY BE SUBMITTED AFTER SUBSTANTIAL COMPLETION.
- C. ADVISE OWNER OF PENDING INSURANCE CHANGEOVER REQUIREMENTS.
- D. OBTAIN AND SUBMIT RELEASES PERMITTING OWNER UNRESTRICTED USE OF THE WORK AND ACCESS TO SERVICES AND UTILITIES. INCLUDE OCCUPANCY PERMITS, OPERATING CERTIFICATES, AND SIMILAR RELEASES.
- E. COMPLETE STARTUP TESTING OF SYSTEMS.
- F. TERMINATE AND REMOVE TEMPORARY FACILITIES FROM PROJECT SITE, ALONG WITH MOCKUPS, CONSTRUCTION TOOLS, AND SIMILAR ELEMENTS.
- G. SUBMIT CHANGEOVER INFORMATION RELATED TO OWNER'S OCCUPANCY, USE, OPERATION, AND MAINTENANCE.
- H. COMPLETE FINAL CLEANING REQUIREMENTS, INCLUDING TOUCH-UP PAINTING.
- I. TOUCH-UP AND OTHERWISE REPAIR AND RESTORE MARRED EXPOSED FINISHES TO ELIMINATE VISUAL DEFECTS.
- J. COORDINATE WITH OWNER'S PERSONNEL FOR FINAL CHANGEOVER OF TEMPORARY LOCKS TO PERMANENT LOCKS. ADVISE OWNER'S PERSONNEL OF CHANGEOVER IN SECURITY PROVISIONS.
- K. ADVISE OWNER OF CHANGEOVER IN HEAT, VENTILATING AND AIR CONDITIONING AND OTHER UTILITIES.

AT THE END OF THE PROJECT, UPON RECEIPT OF THE CERTIFICATE OF SUBSTANTIAL COMPLETION, PROVIDE A CD, DVD, OR THUMB DRIVE (DEPENDING ON SIZE) CONTAINING THE FOLLOWING PROJECT RECORD DOCUMENTS IN DIGITAL PDF FORMAT:

- A. RECORD DRAWINGS (MARK UP INDICATING ACTUAL INSTALLATIONS IN RED WHERE INSTALLATION VARIES FROM ORIGINALLY SHOWN AND SCAN DRAWING IN COLOR)
- B. RECORD PRODUCT DATA (SEE SECTION 013300 - SUBMITTAL PROCEDURES FOR PRODUCTS REQUIRING SUBMITTALS)
- C. OPERATION AND MAINTENANCE MANUALS
- D. CONTRACTOR WARRANTIES

SUBMIT EXTRA STOCK MATERIALS AS STATED WITHIN INDIVIDUAL SPECIFICATION SECTIONS.

PROVIDE FINAL CLEANING. CONDUCT CLEANING AND WASTE-REMOVAL OPERATIONS TO COMPLY WITH LOCAL LAWS AND ORDINANCES AND FEDERAL AND LOCAL ENVIRONMENTAL AND ANTIPOLLUTION REGULATIONS. THE GENERAL CONTRACTOR SHALL EMPLOY PROFESSIONAL CLEANERS WITH A MINIMUM OF FIVE YEARS COMMERCIAL CLEANING EXPERIENCE OF PROJECTS OF SIMILAR SIZE FOR FINAL CLEANING, INCLUDING A SEPARATE PROFESSIONAL COMMERCIAL WINDOW WASHER. CLEAN EACH SURFACE OR UNIT TO CONDITION EXPECTED IN AN AVERAGE COMMERCIAL BUILDING CLEANING AND MAINTENANCE PROGRAM. COMPLY WITH MANUFACTURER'S WRITTEN INSTRUCTIONS.

SECTION 033950 - CURING, SEALING & HARDENING CONCRETE FLOORS

UNDER THIS SECTION OF THE SPECIFICATIONS THE CONTRACTOR SHALL FURNISH ALL LABOR AND MATERIALS REQUIRED TO COMPLETE THE FOLLOWING ITEMS OF WORK IN ACCORDANCE WITH THE DRAWINGS AND SPECIFICATIONS:

- A. SINGLE APPLICATION CURE SEAL HARDENER FOR CONCRETE FLOORS
- B. PRECAUTIONS FOR AVOIDING STAINING CONCRETE BEFORE AND AFTER APPLICATION.

SUBMITTALS:
- A. SEE SECTION 013300

PRODUCTS:
BASIS OF DESIGN: SUBJECT TO COMPLIANCE WITH REQUIREMENTS, PROVIDE PRODUCTS FROM THE FOLLOWING MANUFACTURER: PROSOCO, INC., 3741 GREENWAY CIRCLE, LAWRENCE, KS 66046. PHONE: (800) 255-4255; FAX: (785) 830-9797. E-MAIL: CUSTOMERCARE@PROSOCO.COM

- A. CURE-SEAL-HARDENER: CONSOLIDECK® LS®
- B. MAPEI: MAPECRETE HARD LI
- C. EUCLID CHEMICAL: ULTRASIL 7
- D. W.R. MEADOWS: SIL-CRETE

PROTECTION: PROTECT INSTALLED FLOORS UNTIL CHEMICAL REACTION PROCESS IS COMPLETE PER MANUFACTURER'S RECOMMENDATION.

SECTION 042313 - GLASS UNIT MASONRY

- A. A. Work included:
- B. 1. Hollow Glass block, or solid glass brick.
- C. 2. Mortar.
- D. 3. Integral joint reinforcing and anchors.
- E. 4. Expansion and Packing materials.
- F. Sealant.

PART 2 PRODUCTS
- A. A. Available Manufacturers: Subject to compliance with requirements, manufacturers offering products that may be incorporated into the Work include, but are not limited to, the following:
  - 1. Seves Glass Block Inc., 10576 Broadview Rd, Cleveland, Ohio 44147, 440-627-6257 or 877-SEVES11 (877-738-3711), www.sevesglassblockinc.com inquiry@sevesglassblock.com
  - 2. Approved equal.
- B. GLASS UNITS
  - 1. Glass Block Units
    - A. Texture: Smooth
    - B. Color: Frosted white
  - 2. Actual Sizes: 7-1/2" x 7-1/2" x 3-1/8" Inch
  - 3. Heat Transmission U-Value (BTU/hr ft2 °F): .53
  - 4. Thermal Resistance R-value: 1.89
  - 5. Privacy: Maximum
  - 6. Visible Light Transmission: 80%
  - 7. Shading Coefficient: 90.80
  - 8. Sound Transmission S.T.C. (dB): 37
  - 9. Solar Heat Gain Coefficient: 79
  - 10. Edge Coating – White Latex base or PVB.

MORTAR MATERIALS
- A. A. Portland Cement: ASTM C 150, Type I or Type II, natural color, white, or a blend top roduce mortar color indicated.
  - 1. Where joints are indicated to be raked out and pointed, gray cement may be used for setting mortar.
- B. B. Hydrated Lime: ASTM C 207, Type S.
- C. C. Portland Cement-Lime Mix: Packaged blend of Portland cement complying with ASTM C 150, Type I or Type III, and hydrated lime complying with ASTM C 207, Type S.
- D. Shall be prepared according to ASTM C270 for Type S Mortar. Mortar to have 1 part Portland Cement (Type 1), ½ part lime and 2-1/2 to 3 parts of fine sand passing No. 20 sieve and free of iron compounds to avoid stains. Use white Portland Cement and silica sand for white joints. Mix mortar drier than normal and only an amount that will be used in 30-60 min. Glass block will not absorb water the same as brick. Do not use re-tempered mortar.
  - 1. Portland Cement: Type I in accordance with ASTM C150. If a waterproof Portland Cement is used, the integral type waterproofer shall be omitted. (Masonry Cement is not recommended) Color: Gray
  - 2. Lime: Shall be a dolomitic pressure-hydrated lime, special hydrate, Type S, in accordance with ASTM C207.
  - 3. Sand: A clean, white quartzite or silica type, essentially free of iron compounds, in accordance with ASTM C144, not less than 100% passing a No. 8 sieve.
  - 4. Integral Type Water-repellent. Stearate type by Sonneborn Building Products (Hydrocide powder, 1-800-243-6739), or equal. Add hydrocide powder to dry mortar mix. Do not add powder to wet mortar mix.
    - a. Lehigh Cement,
    - b. SPEC MIX,
    - c. Approved equal.
- E. Water: Potable.

GLASS UNIT MASONRY ACCESSORIES
- A. Panel Reinforcement: Ladder-type units, butt welded, not lapped and welded; complying with ASTM A 951 in straight lengths of not less than 10 feet, and as follows:
  - 1. Stainless Steel wire.
  - 2. Wire Size: W1.7 or 0.148-inch diameter.
  - 3. Width: 1-5/8 inches.
  - 4. Spacing of Cross Rods: Not more than 16 inches apart.
- B. Fasteners, General: Unless otherwise indicated, provide Type 304 or Type 316 stainless-steel fasteners at exterior walls and zinc-plated fasteners with coating complying with ASTM B 633, Class Fe/Zn 5, at interior walls. Select fasteners for type, grade, and class required.
- C. Asphalt Emulsion: Cold-applied asphalt emulsion complying with ASTM D 1187 or ASTM D 1227.
- D. Sealants: Manufacturer’s standard chemically curing, elastomeric sealants that comply with applicable requirements in Section 079200 “Joint Sealants.”
  - 1. Single-component, non-sag urethane sealant.
  - 2. Provide interior sealants that have a VOC content of 250 g/L or less when calculated according to 40 CFR 59, Subpart D (EPA Method 24).
- E. Sealant Accessories: Provide sealant accessories, including primers, bond-breaker tape, and cylindrical sealant backing, that comply with applicable requirements in Section 079200 “Joint Sealants”, and as follows:
  - 1. Expansion Strips / Compressible Filler: 3/8 inch by 1/2 inches polyethylene foam or glass fiber.
  - 2. Panel Anchors: 20 gauge X 1-5/8” X 16” stainless steel with staggered perforations.
  - 3. Triangular Anchors: Stainless Steel Triangular wire tie type. 3/16 inch, lengths as indicated on the Drawings.

SECTION 047300 - MANUFACTURED STONE VENEER

SECTION INCLUDES
- A. CULTURED STONE VENEER
- B. ARCHITECTURAL TRIM STONE.

SUBMITTALS:
- A. SEE SECTION 013300

QUALITY ASSURANCE:
- A. MOCK-UP: PROVIDE A MOCK-UP FOR EVALUATION OF SURFACE PREPARATION TECHNIQUES AND APPLICATION WORKMANSHIP PRIOR TO COMPLETION OF STONE VENER INSTALLATION.
  - 1. INSTALL MOCK-UP ON AN INCONSPICUOUS BUILDING ELEVATION.
  - 2. MINIMUM SIZE 3 FOOT BY 3 FOOT AND SHOWING TRANSITION TO ADJACENT MATERIALS ANTICIPATED.
  - 3. DO NOT PROCEED WITH REMAINING WORK UNTIL WORKMANSHIP, COLOR, TEXTURE AND PATTERN ARE APPROVED BY ARCHITECT.
  - 4. REFINISH MOCK-UP AREA AS REQUIRED TO PRODUCE ACCEPTABLE WORK.

MANUFACTURED STONE VENEER–GENERAL
- A. BASIS-OF-DESIGN PRODUCT: PROVIDE PRODUCTS BY WESTLAKE ROYAL STONE - CULTURED STONE, MANUFACTURER'S COLOR AS SELECTED BY OWNER, OR COMPARABLE PRODUCTS BY ONE OF THE FOLLOWING:
  - 1. WESTLAKE ROYAL STONE:
    - a. PROFILE: DRESSED FIELDSTONE.
    - b. COLOR: SELECTED BY OWNER.
  - 2. CORONADO STONE PRODUCTS:
    - a. PROFILE: MINNESOTA FIELD STONE.
    - b. COLOR: SELECTED BY OWNER.
  - 3. MDM STONEWOKR INC:
    - A. PROFILE: BUCK COUNTY FIELDSTONE
    - B. COLOR: SELECTED BY OWNER.
  - 4. CAST NATURAL STONE:
    - a. HORSESHOE BAY FIELDSTONE
    - b. COLOR: SELECTED BY OWNER.

ACCESSORIES:
MATCHING CORNER PIECES
STONE ACCESSORIES: *PRE-CAST CAP STONE*.
COLOR: *PER ARCHITECT'S SELECTION TO MATCH ADJACENT FINISHES*.

INSTALLATION:
INSTALL/APPLY RELATED MATERIALS IN ACCORDANCE WITH TYPE OF SUBSTRATE AND MANUFACTURED STONE VENEER MANUFACTURE’S INSTALLATION INSTRUCTIONS.

- A. PROVIDE STONES MANUFACTURED SPECIFICALLY FOR INSTALLATION AT CORNERS.
- B. MORTAR JOINTS STYLE: STANDARD 1/2 INCH TOOLED
- C. FLASHING: COORDINATE WITH SHEET METAL FLASHING AND TRIM.
- D. MANUFACTURER’S FIELD SERVICES: PROVIDE PERIODIC SITE VISITS AS REQUESTED BY ARCHITECT AND REPORT ANY DISCREPANCIES TO THE CONTRACTOR.

SECTION 061000 - ROUGH CARPENTRY

PRESERVATIVE TREATMENT BY PRESSURE PROCESS: AWPA U1; USE CATEGORY UC2 FOR INTERIOR CONSTRUCTION NOT IN CONTACT WITH GROUND, USE CATEGORY UC3B FOR EXTERIOR CONSTRUCTION NOT IN CONTACT WITH GROUND, AND USE CATEGORY UC4A FOR ITEMS IN CONTACT WITH GROUND.

PRESERVATIVE CHEMICALS: ACCEPTABLE TO AUTHORITIES HAVING JURISDICTION AND CONTAINING NO ARSENIC OR CHROMIUM.
FOR EXPOSED ITEMS INDICATED TO RECEIVE A STAINED OR NATURAL FINISH, CHEMICAL FORMULATIONS SHALL NOT REQUIRE INCISING, CONTAIN COLORANTS, BLEED THROUGH, OR OTHERWISE ADVERSELY AFFECT FINISHES

WHERE FIRE-RETARDANT-TREATED MATERIALS ARE INDICATED, MATERIALS SHALL COMPLY WITH REQUIREMENTS IN THIS ARTICLE, THAT ARE ACCEPTABLE TO AUTHORITIES HAVING JURISDICTION, AND WITH FIRE-TEST-RESPONSE CHARACTERISTICS SPECIFIED AS DETERMINED BY TESTING IDENTICAL PRODUCTS PER TEST METHOD INDICATED BY A QUALIFIED TESTING AGENCY.

FIRE-RETARDANT-TREATED LUMBER AND PLYWOOD BY PRESSURE PROCESS: PRODUCTS WITH A FLAME-SPREAD INDEX OF 25 OR LESS WHEN TESTED ACCORDING TO ASTM E 84.

IDENTIFY FIRE-RETARDANT-TREATED WOOD WITH APPROPRIATE CLASSIFICATION MARKING OF QUALIFIED TESTING AGENCY.
FOR EXPOSED LUMBER INDICATED TO RECEIVE A STAINED OR NATURAL FINISH, MARK END OR BACK OF EACH PIECE OR OMIT MARKING AND PROVIDE CERTIFICATES OF TREATMENT COMPLIANCE ISSUED BY TESTING AGENCY.

PROVIDE MISCELLANEOUS LUMBER INDICATED AND LUMBER FOR SUPPORT OR ATTACHMENT OF OTHER CONSTRUCTION, INCLUDING THE FOLLOWING:

- A. BLOCKING.
- B. NAILERS.
- C. FURRING.

DIMENSION LUMBER ITEMS: CONSTRUCTION OR NO. 2 GRADE LUMBER OF ANY SPECIES.

EQUIPMENT BACKING PANELS: PLYWOOD, DOC PS 1, FIRE-RETARDANT TREATED, IN THICKNESS INDICATED OR, IF NOT INDICATED, NOT LESS THAN 3/4-INCH NOMINAL THICKNESS.

FASTENERS SHALL BE OF SIZE AND TYPE INDICATED AND SHALL COMPLY WITH REQUIREMENTS SPECIFIED IN THIS ARTICLE FOR MATERIAL AND MANUFACTURE.

COMPLY WITH AF&PA'S WCD 1, "DETAILS FOR CONVENTIONAL WOOD FRAME CONSTRUCTION," UNLESS OTHERWISE INDICATED.

INSTALL METAL FRAMING ANCHORS TO COMPLY WITH MANUFACTURER'S WRITTEN INSTRUCTIONS. INSTALL FASTENERS THROUGH EACH FASTENER HOLE.

PROVIDE BLOCKING AND FRAMING AS INDICATED AND AS REQUIRED TO SUPPORT FACING MATERIALS, FIXTURES, SPECIALTY ITEMS, AND TRIM.

PROVIDE FIRE BLOCKING IN FURRED SPACES, STUD SPACES, AND OTHER CONCEALED CAVITIES AS INDICATED.

COMPLY WITH AWPA M4 FOR APPLYING FIELD TREATMENT TO CUT SURFACES OF PRESERVATIVE-TREATED LUMBER.

SECURELY ATTACH ROUGH CARPENTRY WORK TO SUBSTRATE BY ANCHORING AND FASTENING AS INDICATED, COMPLYING WITH TABLE 2304.9.1, "FASTENING SCHEDULE," IN ICC'S INTERNATIONAL BUILDING CODE (IBC).

SECTION 072000 - BUILDING INSULATION

SECTION INCLUDES:
- A. Perimeter foundation insulation.
- B. Thermal batt insulation for use in ceilings.
- C. Foam Insulation for masonry block walls.

Materials
- A. Extruded Polystyrene Rigid Foam Board Insulation - Foundation Walls and Under Slab shall be 1-1/2" polystyrene closed-cell foam insulation. Minimum five year aged "R" value shall be 7.5 measured at 75 degree mean temperature and a compressive strength of 25 psi. Insulation shall comply with ASTM C578, Type IV. Acceptable products include the following.
  - 1. Styrofoam Brand "Square Edge" as manufactured by Dow Chemical
  - 2. Foamular "250" as manufactured by UCI Industries
  - 3. “Foamular 400 XPS”; Owens-Corning (800-438-7465)
- B. Batt insulation for walls and above ceilings shall be fiberglass insulation with an aluminum foil vapor barrier providing a 0.5 perm or less. Ceiling insulation shall have a minimum "R" value of 19 and wall insulation shall have a minimum "R" value of 13. Insulation shall be friction-fit provided with minimum 2-inch wide flanges at the edges for fastening. Insulation shall comply with ASTM C665, Type III, Class B.
  - 1. Unfaced Glass Fiber Batt Insulation Approved Manufacturers:
    - a. “ComfortTherm”; Johns-Manville (800-654-3103)
    - b. “EcoTouch”: Owens-Corning (800-438-7465)
    - c. “Sustainable Insulation”; CertainTeed Corp (800-223-8990)
    - d. “EcoBatt”; Knauf Insulation GmbH (800-825-4434)
  - 2. Faced Glass Fiber Blanket Insulation Approved Manufacturers:
    - a. “ComfortTherm”; Johns-Manville (800-654-3103)
    - b. “EcoTouch”: Owens-Corning (800-438-7465)
    - c. “Sustainable Insulation”; CertainTeed Corp (800-223-8990)
    - d. “EcoBatt”; Knauf Insulation GmbH (800-825-4434)
- C. Foam insulation for concrete block walls shall R-value 14.2 for a 60 pound eight inch concrete block. Acceptable manufacturers include the following.
  - a. "Core-Fill-500" as manufactured by Tailored Chemical Products, Inc., Hickory, NC.
  - b. cfiFOAM, Inc., PO Box 10393, Knoxville, TN 37939.
  - c. THERMCO® FOAM Manufactured by Thermal Corporation of America Route #3, Highway 34 West Mt. Pleasant, IA 52641
  - d. Tripolymer® Foam Insulation manufactured by FDI Enterprises.

073113 - ASPHALT SHINGLES

SECTION INCLUDES:
- A. ASPHALT SHINGLES.
- B. UNDERLAYMENT.
- C. METAL FLASHING AND TRIM.

MANUFACTURER'S WARRANTY: MANUFACTURER AGREES TO REPAIR OR REPLACE ASPHALT SHINGLES THAT FAIL WITHIN SPECIFIED WARRANTY PERIOD.

FAILURES INCLUDE, BUT ARE NOT LIMITED TO, THE FOLLOWING:
- A. MANUFACTURING DEFECTS.

MATERIAL WARRANTY PERIOD: 50 YEARS FROM DATE OF SUBSTANTIAL COMPLETION.

WIND-SPEED WARRANTY PERIOD: ASPHALT SHINGLES WILL RESIST BLOW-OFF OR DAMAGE CAUSED BY WIND SPEEDS OF UP TO 110 MPH FOR FIVE YEARS FROM DATE OF SUBSTANTIAL COMPLETION.

ALGAE-RESISTANCE WARRANTY PERIOD: ASPHALT SHINGLES WILL NOT DISCOLOR FOR 15 YEARS FROM DATE OF SUBSTANTIAL COMPLETION.

ROOFING INSTALLER'S WARRANTY: ON WARRANTY FORM AT END OF THIS SECTION, SIGNED BY INSTALLER, IN WHICH INSTALLER AGREES TO REPAIR OR REPLACE COMPONENTS OF ASPHALT-SHINGLE ROOFING THAT FAIL IN MATERIALS OR WORKMANSHIP WITHIN SPECIFIED WARRANTY PERIOD. WARRANTY PERIOD: FIVE YEARS FROM DATE OF SUBSTANTIAL COMPLETION.

GLASS-FIBER-REINFORCED ASPHALT SHINGLES
- A. BASIS-OF-DESIGN PRODUCT: PROVIDE CERTAINTEED LANDMARK PRO SERIES SHINGLES, MOJAVE TAN OR MANUFACTURER'S STANDARD COLOR AS SELECTED BY OWNER, OR COMPARABLE PRODUCTS BY ONE OF THE FOLLOWING:
  - 1. GAF MATERIALS CORPORATION
  - 2. CERTAINTEED
  - 3. IKO
- B. STRIP SIZE: MANUFACTURER'S STANDARD.
- C. HIP AND RIDGE SHINGLES: MANUFACTURER'S STANDARD UNITS TO MATCH ASPHALT SHINGLES

UNDERLAYMENT MATERIALS
- A. FELT: ASTM D 226/D 226M, ASPHALT-SATURATED ORGANIC FELTS, NONPERFORATED.
- B. TYPE: TYPE II.

ACCESSORIES
- A. ASPHALT ROOFING CEMENT
- B. ROOFING NAILS
- C. SHANK: BARBED.
- D. FELT-UNDERLAYMENT NAILS

PREFORMED RIGID RIDGE VENT (NON-ROLLED): MANUFACTURER'S STANDARD, RIGID SECTION HIGH-DENSITY POLYPROPYLENE OR OTHER UV-STABILIZED PLASTIC RIDGE VENT FOR USE UNDER RIDGE SHINGLES.
- A. MINIMUM NET FREE AREA: 18.0 SQ. IN/LINEAR FEET.
- B. WIDTH: 12 INCHES.
- C. THICKNESS: 0.065 INCHES.
- D. FEATURES: CRUSH RESISTANT.
- E. NONWOVEN GEOTEXTILE FILTER STRIPS.
- F. EXTERNAL DEFLECTOR BAFFLES.
- G. COVER WITH RIDGE CAP SHINGLES

EAVES PROTECTION: CERTAINTEED “WINTERGUARD HT”;ASTM D1970 SHEET BARRIER OF SELF-ADHERING RUBBERIZED ASPHALT MEMBRANE SHINGLE UNDERLAYMENT HAVING INTERNAL REINFORCEMENT AND “SPLIT” BACK PLASTIC RELEASE FILM; PROVIDE MATERIAL WARRANTY EQUAL IN DURATION TO THAT OF SHINGLES BEING APPLIED.

UNDERLAYMENT: CERTAINTEED “ROOFERS’ SELECT”, ASTM D 6757; ASPHALT-IMPREGNATED FIBERGLASS-REINFORCED ORGANIC FELT DESIGNED FOR USE ON ROOF DECKS AS A WATER-RESISTANT LAYER BENEATH ROOFING SHINGLES

FLASHING MATERIALS
SHEET FLASHING: ASTM A 361/A361M; 26 GAUGE (0.45 MM) STEEL WITH MINIMUM G115/Z350 GALVANIZED COATING.

SHEET FLASHING: ASTM B 209; 0.025 (0.63MM) THICK ALUMINUM, MILL FINISH.

SHEET FLASHING: ASTM B 370; COLD ROLLED COPPER; 16 OUNCES PER SQUARE FOOT (0.55MM), NATURAL FINISH.

BITUMIOUS PAINT: ACID AND ALKALI RESISTANT TYPE; BLACK COLOR.

TINNER’S PAINT: COLOR AS SELECTED BY ARCHITECT TO COORDINATE WITH SHINGLE COLOR.

ACCESSORIES

NAILS: STANDARD ROUND WIRE TYPE ROOFING NAILS, CORROSION RESISTANT; HOT DIPPED ZINC COATED STEEL, ALUMINUM OR CHORMATED STEEL; MINIMUM 3.8 INCH (9.5MM) HEAD DIAMETER; MINIMUM 11 OR 12 GAGE (2.5MM) SHANK DIAMETER; SHANK TO BE SUFFICIENT LENGTH TO PENETRATE THROUGH THE ROOF SHEATHING OR ¾ INCH (19MM) INTO SOLID WOOD, PLYWOOD OR NON-VENEER WOOD DECKING.

ASPHALT ROOFING CEMENT: ASTM D 4586, TYPE I OR II

FLASHING FABRICATION

FORM FLASHING TO PROFILES INDICATED ON DRAWINGS AND TO PROTECT ROOFING MATERIALS FROM PHYSICAL DAMAGE AND SHED WATER.

FORM SECTIONS SQUARE AND ACCURATE TO PROFILE, IN MAXIMUM POSSIBLE LENGTHS, FREE FROM DISTORTION OR DEFECTS DETRIMENTAL TO APPEARANCE OR PERFORMANCE.

SECTION 076200 - SHEET METAL FLASHING AND TRIM

SECTION INCLUDES:
- A. FORMED ROOF DRAINAGE SHEET METAL FABRICATIONS.
- B. FORMED STEEP-SLOPE ROOF SHEET METAL FABRICATIONS.
- C. FORMED WALL SHEET METAL FABRICATIONS.
- D. FORMED SOFFIT PANELS

PERFORMANCE REQUIREMENTS
- A. GENERAL: SHEET METAL FLASHING AND TRIM ASSEMBLIES AS INDICATED SHALL WITHSTAND WIND LOADS, STRUCTURAL MOVEMENT, THERMALLY INDUCED MOVEMENT, AND EXPOSURE TO WEATHER WITHOUT FAILURE DUE TO DEFECTIVE MANUFACTURE, FABRICATION, INSTALLATION, OR OTHER DEFECTS IN CONSTRUCTION. COMPLETED SHEET METAL FLASHING AND TRIM SHALL NOT RATTLE, LEAK, OR LOOSEN, AND SHALL REMAIN WATERTIGHT.
- B. THERMAL MOVEMENTS: PROVIDE SHEET METAL FLASHING AND TRIM THAT ALLOWS FOR THERMAL MOVEMENTS FROM AMBIENT AND SURFACE TEMPERATURE CHANGES.

ACTION SUBMITTALS
- A. PRODUCT DATA: FOR EACH TYPE OF PRODUCT INDICATED. INCLUDE CONSTRUCTION DETAILS, MATERIAL DESCRIPTIONS, DIMENSIONS OF INDIVIDUAL COMPONENTS AND PROFILES, AND FINISHES FOR EACH MANUFACTURED PRODUCT AND ACCESSORY.
- B. SHOP DRAWINGS: SHOW FABRICATION AND INSTALLATION LAYOUTS OF SHEET METAL FLASHING AND TRIM, INCLUDING PLANS, ELEVATIONS, EXPANSION-JOINT LOCATIONS, AND KEYED DETAILS. DISTINGUISH BETWEEN SHOP- AND FIELD-ASSEMBLED WORK. INCLUDE THE FOLLOWING:
  - 1. IDENTIFICATION OF MATERIAL, THICKNESS, WEIGHT, AND FINISH FOR EACH ITEM AND LOCATION IN PROJECT.
  - 2. DETAILS FOR FORMING SHEET METAL FLASHING AND TRIM, INCLUDING PROFILES, SHAPES, SEAMS, AND DIMENSIONS.
  - 3. DETAILS FOR JOINING, SUPPORTING, AND SECURING SHEET METAL FLASHING AND TRIM, INCLUDING LAYOUT OF FASTENERS, CLEATS, CLIPS, AND OTHER ATTACHMENTS. INCLUDE PATTERN OF SEAMS.
  - 4. DETAILS OF TERMINATION POINTS AND ASSEMBLIES, INCLUDING FIXED POINTS.
  - 5. DETAILS OF EXPANSION JOINTS AND EXPANSION-JOINT COVERS, INCLUDING SHOWING DIRECTION OF EXPANSION AND CONTRACTION.
  - 6. DETAILS OF EDGE CONDITIONS, INCLUDING EAVES, RIDGES, VALLEYS, RAKES, CRICKETS, AND COUNTERFLASHINGS AS APPLICABLE.
  - 7. DETAILS OF SPECIAL CONDITIONS.
  - 8. DETAILS OF CONNECTIONS TO ADJOINING WORK.
  - 9. DETAIL FORMED FLASHING AND TRIM AT A SCALE OF NOT LESS THAN 3 INCHES PER 12 INCHES.
- C. SAMPLES FOR INITIAL SELECTION: FOR EACH TYPE OF SHEET METAL FLASHING, TRIM, AND ACCESSORY INDICATED WITH FACTORY-APPLIED COLOR FINISHES INVOLVING COLOR SELECTION.

SHEET METAL FLASHING AND TRIM STANDARD: COMPLY WITH SMACNA'S "ARCHITECTURAL SHEET METAL MANUAL" UNLESS MORE STRINGENT REQUIREMENTS ARE SPECIFIED OR SHOWN ON DRAWINGS.

SHEET METALS
- A. METALLIC-COATED STEEL SHEET: RESTRICTED FLATNESS STEEL SHEET, METALLIC COATED BY THE HOT-DIP PROCESS AND PREPAINTED BY THE COIL-COATING PROCESS TO COMPLY WITH ASTM A 755/A 755M.
  - 1. ZINC-COATED (GALVANIZED) STEEL SHEET: ASTM A 653/A 653M, G90 COATING DESIGNATION; STRUCTURAL QUALITY.
  - 2. SURFACE: SMOOTH, FLAT.
  - 3. EXPOSED COIL-COATED FINISH:
    - a. TWO-COAT FLUOROPOLYMER: AAMA 621. FLUOROPOLYMER FINISH CONTAINING NOT LESS THAN 70 PERCENT PVDF RESIN BY WEIGHT IN COLOR COAT. PREPARE, PRETREAT, AND APPLY COATING TO EXPOSED METAL SURFACES TO COMPLY WITH COATING AND RESIN MANUFACTURERS' WRITTEN INSTRUCTIONS.
  - 4. COLOR: AS SELECTED BY OWNER FROM MANUFACTURER'S FULL RANGE.
  - 5. CONCEALED FINISH: PRETREAT WITH MANUFACTURER'S STANDARD WHITE OR LIGHT-COLORED ACRYLIC OR POLYESTER BACKER FINISH, CONSISTING OF PRIME COAT AND WASH COAT WITH A MINIMUM TOTAL DRY FILM THICKNESS OF 0.5 MIL.

ALUMINUM SOFFITS
- A. APPROVED MANUFACTURERS:
  - 1. “ALUMA-GUARD PLUS”; ALCOA BUILDING PRODUCTS (800-962-6973)
  - 2. “COMMERCIAL TRIPLE 4 CENTER VENT”; NAPCO, INC. (800-786-2726)
  - 3. “WIND-LOK SOFFIT PANELS”; ATAS INTERNATIONAL, INC. (800-468-1441)
- B. MATERIALS:
  - 1. SOFFITS TO BE SHEET ALUMINUM, ALLOY 3105-H26P.
  - 2. DIMENSIONS:
    - a. THICKNESS: MINIMUM .019”
    - b. WIDTH: 12” WIDE, 3/8” DEEP WITH WIDE FACES FORMING U GROOVES AT 4” O.C.
  - 3. FINISH: TWO-COAT WATER-BASE ACRYLIC COMPLYING WITH AAMA 1402.
    - a. DRY FILM THICKNESS: 0.9 TO 1.0 MILS.
    - b. GLOSS: 10 TO 14 AT 60 DEGREES, WHEN EVALUATED IN ACCORDANCE WITH ASTM D523.
    - c. ADHESION: EXCELLENT, WHEN TESTED IN ACCORDANCE WITH ASTM D3359.
    - d. HUMIDITY RESISTANCE: NO LOSS OF GLOSS, CRACKING OR PEELING, WHEN TESTED IN ACCORDANCE WITH ASTM D2247 WITH 1,000 HOURS OF EXPOSURE AT 100 PERCENT RELATIVE HUMIDITY.
    - e. SALT SPRAY RESISTANCE: NO UNDER-CUTTING OF FILM FROM EDGES IN EXCESS OF 1/16 INCH OR FACE BLISTERING, WHEN TESTED IN ACCORDANCE WITH ASTM B117 WITH 3,000 HOURS AT 5 PERCENT NEUTRAL SALT SPRAY.
    - f. FADE RESISTANCE: MAXIMUM COLOR DIFFERENCE OF 5 WHEN EVALUATED IN ACCORDANCE WITH ASTM D2244 AFTER 10 YEARS AT 45 DEGREES SOUTH FLORIDA EXPOSURE, AFTER REMOVING EXTERNAL DEPOSITS.
  - 4. VENTILATION: PERFORATED DESIGN
    - a. FREE AIR SPACE AREA: 4.4 SQ. IN PER LINEAL FEET NET FREE AREA IN CENTER PANEL ONLY.
- C. ACCESSORIES: PROVIDE AS REQUIRED FOR A COMPLETE INSTALLATION AS INDICATED AND SPECIFIED.
  - 1. “J” CHANNEL
  - 2. “F” CHANNEL
  - 3. “T” TRIM
  - 4. PRE-FINISHED 0.019” ALUMINUM COIL MATERIAL.
  - 5. NAILS: MANUFACTURERS STANDARD ALUMINUM NAILS OF 5056 OR 6010 ALLOY.
- D. FINISHES:
  - 1. COLOR: AS SHOWN ON EXTERIOR FINISH LEGEND.
  - 2. TEXTURE: “NON-WOOD GRAIN”, SMOOTH MATTE TEXTURE.

MISCELLANEOUS MATERIALS
- A. GENERAL: PROVIDE MATERIALS AND TYPES OF FASTENERS, SOLDER, WELDING RODS, PROTECTIVE COATINGS, SEPARATORS, SEALANTS, AND OTHER MISCELLANEOUS ITEMS AS REQUIRED FOR COMPLETE SHEET METAL FLASHING AND TRIM INSTALLATION AND RECOMMENDED BY MANUFACTURER OF PRIMARY SHEET METAL UNLESS OTHERWISE INDICATED.
- B. FASTENERS: WOOD SCREWS, ANNULAR THREADED NAILS, SELF-TAPPING SCREWS, SELF-LOCKING RIVETS AND BOLTS, AND OTHER SUITABLE FASTENERS DESIGNED TO WITHSTAND DESIGN LOADS AND RECOMMENDED BY MANUFACTURER OF PRIMARY SHEET METAL.
  - 1. GENERAL: BLIND FASTENERS OR SELF-DRILLING SCREWS, GASKETED, WITH HEX-WASHER HEAD.
    - a. EXPOSED FASTENERS: HEADS MATCHING COLOR OF SHEET METAL USING PLASTIC CAPS OR FACTORY-APPLIED COATING.
    - b. BLIND FASTENERS: HIGH-STRENGTH ALUMINUM OR STAINLESS-STEEL RIVETS SUITABLE FOR METAL BEING FASTENED.
  - 2. FASTENERS FOR ZINC-COATED (GALVANIZED) STEEL SHEET: HOT-DIP GALVANIZED STEEL ACCORDING TO ASTM A 153/A 153M OR ASTM F 2329 OR SERIES 300 STAINLESS STEEL.
- C. SEALANT TAPE: PRESSURE-SENSITIVE, 100 PERCENT SOLIDS, GRAY POLYISOBUTYLENE COMPOUND SEALANT TAPE WITH RELEASE-PAPER BACKING. PROVIDE PERMANENTLY ELASTIC, NONSAG, NONTOXIC, NONSTAINING TAPE 1/2 INCH WIDE AND 1/8 INCH THICK.
- D. ELASTOMERIC SEALANT: ASTM C 920, ELASTOMERIC POLYURETHANE OR POLYSULFIDE POLYMER SEALANT; LOW MODULUS; OF TYPE, GRADE, CLASS, AND USE CLASSIFICATIONS REQUIRED TO SEAL JOINTS IN SHEET METAL FLASHING AND TRIM AND REMAIN WATERTIGHT.
- E. BUTYL SEALANT: ASTM C 1311, SINGLE-COMPONENT, SOLVENT-RELEASE BUTYL RUBBER SEALANT; POLYISOBUTYLENE PLASTICIZED; HEAVY BODIED FOR HOOKED-TYPE EXPANSION JOINTS WITH LIMITED MOVEMENT.
- F. BITUMINOUS COATING: COLD-APPLIED ASPHALT EMULSION COMPLYING WITH ASTM D 1187.
- G. ASPHALT ROOFING CEMENT: ASTM D 4586, ASBESTOS FREE, OF CONSISTENCY REQUIRED FOR APPLICATION.

FABRICATION
GENERAL: CUSTOM FABRICATE SHEET METAL FLASHING AND TRIM TO COMPLY WITH RECOMMENDATIONS IN SMACNA'S "ARCHITECTURAL SHEET METAL MANUAL" THAT APPLY TO DESIGN, DIMENSIONS, GEOMETRY, METAL THICKNESS, AND OTHER CHARACTERISTICS OF ITEM INDICATED. FABRICATE ITEMS AT THE SHOP TO GREATEST EXTENT POSSIBLE.

FABRICATION TOLERANCES: FABRICATE SHEET METAL FLASHING AND TRIM THAT IS CAPABLE OF INSTALLATION TO A TOLERANCE OF 1/4 INCH IN 20 FEET ON SLOPE AND LOCATION LINES AS INDICATED AND WITHIN 1/8-INCH OFFSET OF ADJOINING FACES AND OF ALIGNMENT OF MATCHING PROFILES.

ROOF DRAINAGE SHEET METAL FABRICATIONS
- A. HANGING GUTTERS: FABRICATE TO CROSS SECTION INDICATED, COMPLETE WITH END PIECES, OUTLET TUBES, AND OTHER ACCESSORIES AS REQUIRED. FABRICATE IN MINIMUM 96-INCH-LONG SECTIONS. FURNISH FLAT-STOCK GUTTER SPACERS AND GUTTER BRACKETS FABRICATED FROM SAME METAL AS GUTTERS, OF SIZE RECOMMENDED BY SMACNA BUT NOT LESS THAN TWICE THE GUTTER THICKNESS. FABRICATE EXPANSION JOINTS, EXPANSION-JOINT COVERS, AND GUTTER ACCESSORIES FROM SAME METAL AS GUTTERS.
  - 1. GUTTER STYLE: HALF-ROUND, 5" WIDTH.
  - 2. EXPANSION JOINTS: LAP TYPE.
  - 3. GUTTER SUPPORT: BAR HANGER BRACKET.
  - 4. FABRICATE FROM THE FOLLOWING MATERIALS: GALVANIZED STEEL: 24 GAUGe
- B. DOWNSPOUTS: FABRICATE PLAIN ROUND DOWNSPOUTS, 4", COMPLETE WITH MITERED ELBOWS. FURNISH WITH METAL HANGERS, FROM SAME MATERIAL AS DOWNSPOUTS, AND ANCHORS.
  - 1. FABRICATE FROM THE FOLLOWING MATERIALS: GALVANIZED STEEL: 26 GAUGE.
- C. STEEP-SLOPE ROOF SHEET METAL FABRICATIONS
  - 1. DRIP EDGES: FABRICATE FROM THE FOLLOWING MATERIALS:
    - a. GALVANIZED STEEL: 26 GAUGE.
  - 2. EAVE AND RAKE FLASHING: FABRICATE FROM THE FOLLOWING MATERIALS:
    - a. GALVANIZED STEEL: 26 GAUGE.
  - 3. FASCIA: FABRICATE FROM THE FOLLOWING MATERIALS:
    - a. GALVANIZED STEEL: 26 GAUGE.
  - 4. COUNTERFLASHING: FABRICATE FROM THE FOLLOWING MATERIALS:
    - a. GALVANIZED STEEL: 26 GAUGE.

WALL SHEET METAL FABRICATIONS
- A. OPENING FLASHINGS IN FRAME CONSTRUCTION: FABRICATE HEAD, SILL, AND SIMILAR FLASHINGS TO EXTEND 4 INCHES BEYOND WALL OPENINGS. FORM HEAD AND SILL FLASHING WITH 2-INCH-HIGH, END DAMS. FABRICATE FROM THE FOLLOWING MATERIALS:
  - 1. GALVANIZED STEEL: 26 GAUGE.

METAL PROTECTION: WHERE DISSIMILAR METALS WILL CONTACT EACH OTHER OR CORROSIVE SUBSTRATES, PROTECT AGAINST GALVANIC ACTION BY PAINTING CONTACT SURFACES WITH BITUMINOUS COATING OR BY OTHER PERMANENT SEPARATION AS RECOMMENDED BY SMACNA.

EXPANSION PROVISIONS: PROVIDE FOR THERMAL EXPANSION OF EXPOSED FLASHING AND TRIM. SPACE MOVEMENT JOINTS AT A MAXIMUM OF 10 FEET WITH NO JOINTS ALLOWED WITHIN 24 INCHES OF CORNER OR INTERSECTION. WHERE LAPPED EXPANSION PROVISIONS CANNOT BE USED OR WOULD NOT BE SUFFICIENTLY WATERTIGHT, FORM EXPANSION JOINTS OF INTERMESHING HOOKED FLANGES, NOT LESS THAN 1 INCH DEEP, FILLED WITH SEALANT CONCEALED WITHIN JOINTS.

FASTENER SIZES: USE FASTENERS OF SIZES THAT WILL PENETRATE WOOD SHEATHING NOT LESS THAN 1-1/4 INCHE FOR NAILS AND NOT LESS THAN 3/4 INCH FOR WOOD SCREWS.

SEAL JOINTS AS SHOWN AND AS REQUIRED FOR WATERTIGHT CONSTRUCTION.

ROOF DRAINAGE SYSTEM INSTALLATION
- A. GENERAL: INSTALL SHEET METAL ROOF DRAINAGE ITEMS TO PRODUCE COMPLETE ROOF DRAINAGE SYSTEM ACCORDING TO SMACNA RECOMMENDATIONS AND AS INDICATED. COORDINATE INSTALLATION OF ROOF PERIMETER FLASHING WITH INSTALLATION OF ROOF DRAINAGE SYSTEM.
- B. HANGING GUTTERS: JOIN SECTIONS WITH RIVETED AND SOLDERED JOINTS OR WITH LAPPED JOINTS SEALED WITH SEALANT. PROVIDE FOR THERMAL EXPANSION. ATTACH GUTTERS AT EAVE OR FASCIA TO FIRMLY ANCHORED GUTTER BRACKETS SPACED NOT MORE THAN 36 INCHES APART. PROVIDE END CLOSURES AND SEAL WATERTIGHT WITH SEALANT. SLOPE TO DOWNSPOUTS.
  - 1. FASTEN GUTTER SPACERS TO FRONT AND BACK OF GUTTER.
  - 2. INSTALL GUTTER WITH EXPANSION JOINTS AT LOCATIONS INDICATED, BUT NOT EXCEEDING, 50 FEET APART. INSTALL EXPANSION-JOINT CAPS.
- C. DOWNSPOUTS: JOIN SECTIONS WITH 1-1/2-INCH TELESCOPING JOINTS.
  - 1. PROVIDE HANGERS WITH FASTENERS DESIGNED TO HOLD DOWNSPOUTS SECURELY TO WALLS. LOCATE HANGERS AT TOP AND BOTTOM AND AT APPROXIMATELY 60 INCHES O.C. IN BETWEEN.
  - 2. WHERE INDICATED ON DRAWINGS, CONNECT DOWNSPOUTS TO UNDERGROUND DRAINAGE SYSTEM INDICATED.

ROOF FLASHING INSTALLATION
- A. GENERAL: INSTALL SHEET METAL FLASHING AND TRIM TO COMPLY WITH PERFORMANCE REQUIREMENTS AND SMACNA'S "ARCHITECTURAL SHEET METAL MANUAL." PROVIDE CONCEALED FASTENERS WHERE POSSIBLE, SET UNITS TRUE TO LINE, AND LEVEL AS INDICATED. INSTALL WORK WITH LAPS, JOINTS, AND SEAMS THAT WILL BE PERMANENTLY WATERTIGHT AND WEATHER RESISTANT.
- B. PIPE OR POST COUNTERFLASHING: INSTALL COUNTERFLASHING UMBRELLA WITH CLOSE- FITTING COLLAR WITH TOP EDGE FLARED FOR ELASTOMERIC SEALANT, EXTENDING A MINIMUM OF 4 INCHES OVER BASE FLASHING. INSTALL STAINLESS-STEEL DRAW BAND AND IGHTEN.
- C. COUNTERFLASHING: COORDINATE INSTALLATION OF COUNTERFLASHING WITH INSTALLATION OF BASE FLASHING. INSERT COUNTERFLASHING IN REGLETS OR RECEIVERS AND FIT TIGHTLY TO BASE FLASHING. EXTEND COUNTERFLASHING 4 INCHES OVER BASE FLASHING. LAP COUNTERFLASHING JOINTS A MINIMUM OF 4 INCHES AND BED WITH SEALANT. SECURE IN A WATERPROOF MANNER BY MEANS OF SNAP-IN INSTALLATION AND SEALANT OR LEAD WEDGES AND SEALANT.

WALL FLASHING INSTALLATION
- A. GENERAL: INSTALL SHEET METAL WALL FLASHING TO INTERCEPT AND EXCLUDE PENETRATING MOISTURE ACCORDING TO SMACNA RECOMMENDATIONS AND AS INDICATED. COORDINATE INSTALLATION OF WALL FLASHING WITH INSTALLATION OF WALL-OPENING COMPONENTS SUCH AS WINDOWS, DOORS, AND LOUVERS.
- B. OPENING FLASHINGS IN FRAME CONSTRUCTION: INSTALL CONTINUOUS HEAD, SILL, AND SIMILAR FLASHINGS TO EXTEND 4 INCHES BEYOND WALL OPENINGS.

GENERAL NOTES

- A. COORDINATE DIVISION 1 SPECIFICATIONS WITH OWNER REQUIREMENTS. IF CONFLICT OCCURS, OWNER REQUIREMENTS SHALL GOVERN.

BUNCOMBE COUNTY SPORTS PARK
RESTROOM BUILDING

58 APAC DRIVE
ASHEVILLE, NC

Prepared For
BUNCOMBE COUNTY

58 APAC DRIVE, ASHEVILLE,
NC

DOMOKUR ARCHITECTS

4651 Medina Road
Akron, Ohio 44321-1315
p 330.666.7878

43 South Broad Street, Suite 201
Brevard, North Carolina 28712-3730
p 828.884.8478

www.domokur.com

PRELIMINARY
NOT FOR CONSTRUCTION
This document may not be reproduced in any manner without the express written authorization of Domokur Architects

Issue	Date	Description
1	11/17/2023	ISSUED FOR BID AND PERMIT

SPECIFICATIONS

Project No.: 2022090
Project Manager: MTT
Drawn By: AAI

A001

SECTION 074213 - METAL WALL PANELS

SECTION INCLUDES:
Un-Insulated Metal Wall Panel System: Including aluminum-zinc alloy-coated sheet steel panels; panel mounting system including anchorages, shims, furring, fasteners, gaskets and sealants; related flashing adapters, and masking (as required) for a complete installation.
The following types of work are specified in this Section:
A. Metal Wall Panel System (Furnished by Pre-Engineered Metal Building Supplier) b. Flashings
B. Matching Fascia & Copings
C. Metal wall system shall be grounded in accordance with local Codes, as approved by the Building Department. This Contractor shall provide a provision for connection of wall system grounding system to building ground system by Electrical Contractor. Coordinate with Electrical Contractor as required for complete grounding system.

SUBMITTALS
A. General: Submit the following in accordance with Conditions of Contract and Division 01 Specification Sections.
B. Submit metal manufacturers and fabricator's specifications, installation instructions, and general recommendations for wall panel applications. Include certification or other data substantiating that materials comply with requirements.
C. Samples: Submit 8" square samples of specified metal to be used as wall panels with specified finishes applied.
D. Shop Drawings: Submit Shop Drawings showing manner of forming, joining, and securing metal panels, and pattern of seams. Show expansion joint details and waterproof connections to adjoining work and at obstructions and penetrations.
E. Mockups: Build mockups to verify selections made under sample submittals and to demonstrate aesthetic effects and qualities of materials and execution.
  1. Install first three panels for review prior to installing remainder of metal panel wall system.
  2. Approval of mockups does not constitute approval of deviations from the Contract Documents contained in mockups unless such deviations are specifically approved by Architect in writing.
  3. Approved mockups may become part of the completed Work if undisturbed at time of Substantial Completion.

WARRANTY
A. The following guarantees shall be provided by the metal panel system manufacturer: 1. Durability of the wall panels against rupture, structural failure, or perforation shall be guaranteed for a period of one (1) year from date of Substantial Completion.
  1. The color finish for the wall panels shall be guaranteed by the building manufacturer for standard term against blistering, peeling, cracking, flaking, checking, and chipping. Excessive color change and chalking shall be guaranteed for twenty (20) years.
B. Provide manufacturer's written weathertightness warranty for a maximum of ten (10) years against leaks in wall panel system.

ACCEPTABLE MANUFACTURERS

A. Approved Manufacturers:
  1. Metal Board and Batten Panel System, 10' coverage; AB Martin (717-445-6885), Ephrata, PA 82 Garden Spot Road, Ephrata, PA 17522, https://www.abmartin.net/
  2. Basis of Design Product: Subject to compliance with requirements, provide the following or comparable product from listed manufacturer.
    a. Modular Metal Panels: Factory-formed, steel panels fabricated from AZ-50 aluminum-zinc coated steel consisting of formed metal sheet with vertical panel edges and flat pan, with flush joints between panels, field assembled with nested lapped edges, and attached to supports using concealed fasteners.
      1. Aluminum-Zinc Alloy-Coated Steel Sheet: ASTM A792/A792m, structurally quality, Grade 50, Coating Class AZ50 (Grade 340, Coating Class AZM150), pre-painted by the coil-coating process.
      2. Nominal Thickness: 26 gauge
      3. Batten Width: between 1-1/2 inch and 2 inches
      4. Batten Depth: between 1/2" inch and 1 inch deep leg
      5. Panel Width: 12 inch flat profile, 10" coverage (approximate)
      6. Panel Flatness: Maximum allowable distortion: 1/32 inch in 24 inches (0.813 mm in 610 mm) in any direction
      7. Fastening: Manufacturers standard concealed fastening system.
      8. Length: Standard 5'-0" to 30'-0"; as indicated on Drawings
    b. Sheet Surface: Smooth.
    c. Aluminum Face Sheet Coil-Coated Finish:
      1. Fluoropolymer Two-Coat System: 0.2 mil primer with 0.8 mil 70 percent PVDF fluoropolymer color coat, AAMA 621.
      2. Color: As Selected by Architect from manufacturer's standard colors.
    d. Unexposed Finish: Manufacturer's standard nominal 0/5 mil nominal DFT backer coating.
    e. Exposed Trim, flashings and fastener finish: Match panel finish. All edging and trim to utilize manufacturers standards selections including but not limited to the following:
      1. Outside and Insode Corners
      2. Band Board
      3. Utility Trim, Starter Strips and Termination Strips
      4. Channels (J, F, J&F)
      5. Base Angle and Double Angle
      6. Door trims
      7. Drip Cap

DESIGN LOADS
A. The basic design loads shall include wind (both external and internal), and earthquake (where applicable). All other foreign loads, whether they be of static, dynamic, or kinetic nature, shall be considered as auxiliary loads. Refer to Drawings for design loads.

MISCELLANEOUS MATERIALS
A. Accessories: Except as indicated as work of another specification section, provide components required for a complete wall panel system, including trim, closures, clips, seam covers, battens, flashings, sealants, gaskets, fillers, and similar items. Match materials and finishes of panels.
  1. This Contractor shall provide and install all additional structural material required to install the wall systems that has not been shown on the Drawings.
  2. Refer to Section 07 62 00 - "Flashing and Sheet Metal" for additional flashing requirements.
B. Unless noted otherwise, provide the following sheet metal accessories, factory-formed of the same material in the same finish as wall panels:
  1. Flashings
C. Sealing Tape: Pressure-sensitive, 100 percent solids gray polyisobutylene compound sealing tape with release paper backing. Provide permanently elastic, non-sag, non-toxic, non staining tape 1/2" wide and 1/8" thick.
D. Joint Sealant: One-part elastomeric polyurethane, polysulfide, or silicone rubber sealant, as recommended by the building manufacturer.

SECTION 079200 - JOINT SEALANTS

PROVIDE JOINT SEALANTS, BACKINGS, AND OTHER RELATED MATERIALS THAT ARE COMPATIBLE WITH ONE ANOTHER AND WITH JOINT SUBSTRATES UNDER CONDITIONS OF SERVICE AND APPLICATION, AS DEMONSTRATED BY JOINT-SEALANT MANUFACTURER, BASED ON TESTING AND FIELD EXPERIENCE.

SPECIAL INSTALLER'S WARRANTY: INSTALLER AGREES TO REPAIR OR REPLACE JOINT SEALANTS THAT DO NOT COMPLY WITH PERFORMANCE AND OTHER REQUIREMENTS SPECIFIED IN THIS SECTION WITHIN TWO YEARS YEARS FROM DATE OF SUBSTANTIAL COMPLETION.

SPECIAL MANUFACTURER'S WARRANTY: MANUFACTURER AGREES TO FURNISH JOINT SEALANTS TO REPAIR OR REPLACE THOSE JOINT SEALANTS THAT DO NOT COMPLY WITH PERFORMANCE AND OTHER REQUIREMENTS SPECIFIED IN THIS SECTION WITHIN FIVE YEARS FROM DATE OF SUBSTANTIAL COMPLETION.

SPECIAL WARRANTIES SPECIFIED IN THIS ARTICLE EXCLUDE DETERIORATION OR FAILURE OF JOINT SEALANTS FROM THE FOLLOWING:
  A. MOVEMENT OF THE STRUCTURE CAUSED BY STRESSES ON THE SEALANT EXCEEDING SEALANT MANUFACTURER'S WRITTEN SPECIFICATIONS FOR SEALANT ELONGATION AND COMPRESSION.
  B. DISINTEGRATION OF JOINT SUBSTRATES FROM CAUSES EXCEEDING DESIGN SPECIFICATIONS.
  C. MECHANICAL DAMAGE CAUSED BY INDIVIDUALS, TOOLS, OR OTHER OUTSIDE AGENTS.
  D. CHANGES IN SEALANT APPEARANCE CAUSED BY ACCUMULATION OF DIRT OR OTHER ATMOSPHERIC CONTAMINANTS.

MANUFACTURER'S STANDARD COLORS AS SELECTED BY OWNER.

SUBJECT TO COMPLIANCE WITH REQUIREMENTS PROVIDE PRODUCTS SPECIFIED IN THIS SECTION BY ONE OF THE FOLLOWING:
  A. GE CONSTRUCTION SEALANTS
  B. PECORA CORPORATION
  C. TREMCO INCORPORATED

ELASTOMERIC SEALANTS:
  A. URETHANE, M, NS, 50, NT: MULTICOMPONENT, NONSAG, PLUS 50 PERCENT AND MINUS 50 PERCENT MOVEMENT CAPABILITY NONTRAFFIC-USE, URETHANE JOINT SEALANT; ASTM C 920, TYPE M, GRADE NS, CLASS 50, USE NT.
  B. LOCATIONS: PERIMETER JOINTS BETWEEN ROUGH OPENINGS AND FRAMES OF DOORS AND WINDOWS. JOINTS BETWEEN METAL PANELS. JOINTS IN EXTERIOR INSULATION AND FINISH SYSTEMS.

MILDEW RESISTANT JOINT SEALANTS:
  A. FORMULATED FOR PROLONGED EXPOSURE TO HUMIDITY WITH FUNGICIDE TO PREVENT MOLD AND MILDEW GROWTH.
  B. SILICONE, MILDEW RESISTANT, ACID CURING, S, NS, 25, NT: MILDEW-RESISTANT, SINGLE- COMPONENT, NONSAG, PLUS 25 PERCENT AND MINUS 25 PERCENT MOVEMENT CAPABILITY, NONTRAFFIC-USE, ACID-CURING SILICONE JOINT SEALANT; ASTM C 920, TYPE S, GRADE NS, CLASS 25, USE NT.
  C. LOCATIONS: INTERIOR JOINTS BETWEEN PLUMBING FIXTURES AND ADJOINING WALLS, FLOORS, AND COUNTERS.

LATEX SEALANTS:
  A. ACRYLIC LATEX: ACRYLIC LATEX OR SILICONIZED ACRYLIC LATEX, ASTM C 834, TYPE OP, GRADE NF.
  B. LOCATIONS: PERIMETER JOINTS BETWEEN INTERIOR WALL SURFACES AND FRAMES OF INTERIOR DOORS AND WINDOWS.

SECTION 079200 - JOINT SEALANTS (CONT'D)

JOINT-SEALANT BACKING:
  A. SEALANT BACKING MATERIAL, GENERAL: NONSTAINING; COMPATIBLE WITH JOINT SUBSTRATES, SEALANTS, PRIMERS, AND OTHER JOINT FILLERS; AND APPROVED FOR APPLICATIONS INDICATED BY SEALANT MANUFACTURER BASED ON FIELD EXPERIENCE AND LABORATORY TESTING.
  B. CYLINDRICAL SEALANT BACKINGS: ASTM C 1330, TYPE C (CLOSED-CELL MATERIAL WITH A SURFACE SKIN) TYPE O (OPEN-CELL MATERIAL) TYPE B (BICELLULAR MATERIAL WITH A SURFACE SKIN) OR ANY OF THE PRECEDING TYPES, AS APPROVED IN WRITING BY JOINT- SEALANT MANUFACTURER FOR JOINT APPLICATION INDICATED, AND OF SIZE AND DENSITY TO CONTROL SEALANT DEPTH AND OTHERWISE CONTRIBUTE TO PRODUCING OPTIMUM SEALANT PERFORMANCE.
  C. BOND-BREAKER TAPE: POLYETHYLENE TAPE OR OTHER PLASTIC TAPE RECOMMENDED BY SEALANT MANUFACTURER FOR PREVENTING SEALANT FROM ADHERING TO RIGID, INFLEXIBLE JOINT-FILLER MATERIALS OR JOINT SURFACES AT BACK OF JOINT. PROVIDE SELF-ADHESIVE TAPE WHERE APPLICABLE.

SECTION 081113 - HOLLOW METAL DOORS AND FRAMES

SHOP DRAWINGS TO INCLUDE THE FOLLOWING:

  A. ELEVATIONS OF EACH DOOR TYPE.
  B. DETAILS OF DOORS, INCLUDING VERTICAL- AND HORIZONTAL-EDGE DETAILS AND METAL THICKNESSES.
  C. FRAME DETAILS FOR EACH FRAME TYPE, INCLUDING DIMENSIONED PROFILES AND METAL THICKNESSES.
  D. LOCATIONS OF REINFORCEMENT AND PREPARATIONS FOR HARDWARE.
  E. DETAILS OF EACH DIFFERENT WALL OPENING CONDITION.
  F. DETAILS OF ANCHORAGES, JOINTS, FIELD SPLICES, AND CONNECTIONS.
  G. DETAILS OF ACCESSORIES.
  H. DETAILS OF MOLDINGS, REMOVABLE STOPS, AND GLAZING.
  I. DETAILS OF CONDUIT AND PREPARATIONS FOR POWER, SIGNAL, AND CONTROL SYSTEMS.

SCHEDULE: PROVIDE A SCHEDULE OF HOLLOW-METAL WORK PREPARED BY OR UNDER THE SUPERVISION OF SUPPLIER, USING SAME REFERENCE NUMBERS FOR DETAILS AND OPENINGS AS THOSE ON DRAWINGS. COORDINATE WITH FINAL DOOR HARDWARE SCHEDULE.

SUBJECT TO COMPLIANCE WITH REQUIREMENTS PROVIDE PRODUCTS BY ONE OF THE FOLLOWING:

  A. CECO DOOR; ASSA ABLOY.
  B. CURRIES COMPANY; ASSA ABLOY.
  C. STEELCRAFT; AN ALLEGION BRAND.

EXTERIOR HOLOW-METAL DOORS AND FRAMES:

  A. HEAVY-DUTY DOORS AND FRAMES: SDI A250.8, LEVEL 2.
  B. DOOR CORE: VERTICAL STEEL STIFFENER.
  C. EXPOSED FINISH: PRIME.

ASTRAGALS: PROVIDE OVERLAPPING ASTRAGAL ON ONE LEAF OF PAIRS OF DOORS WHERE REQUIRED BY NFPA 80 FOR FIRE-PERFORMANCE RATING OR WHERE INDICATED. EXTEND MINIMUM 3/4 INCH (19 MM) BEYOND EDGE OF DOOR ON WHICH ASTRAGAL IS MOUNTED OR AS REQUIRED TO COMPLY WITH PUBLISHED LISTING OF QUALIFIED TESTING AGENCY.

INSTALL HOLLOW-METAL WORK PLUMB, RIGID, PROPERLY ALIGNED, AND SECURELY FASTENED IN PLACE. COMPLY WITH DRAWINGS AND MANUFACTURER'S WRITTEN INSTRUCTIONS.

HOLLOW-METAL FRAMES: INSTALL HOLLOW-METAL FRAMES FOR DOORS, TRANSOMS, SIDELITES, BORROWED LITES, AND OTHER OPENINGS, OF SIZE AND PROFILE INDICATED. COMPLY WITH SDI A250.11 OR NAAMM-HMMA 840 AS REQUIRED BY STANDARDS SPECIFIED.

AT FIRE-RATED OPENINGS, INSTALL DOORS AND FRAMES ACCORDING TO NFPA 80 WITH REQUIRED TOLERANCES.

SECTION 083100 - ACCESS DOORS AND PANELS

Section Includes:
A. Access Doors and Frames of the Following Types:
  1. Wall Access Doors
  2. Moisture Resistant Access Doors
  3. Ceiling Access Doors

SUBMITTALS
A. Per Division 01

ACCESS UNITS
A. Wall Access Doors (Non-Rated):
  1. Approved Products:
    a. "WB Series"; J.L. Industries
    b. "Type RDW"; Karp Associates, Inc.
    c. "Model NW Series"; Nystrom Building Products
    d. "Style DW"; Milcor, Inc., a brand of Commercial Products Group of Hart & Cooley, Inc.
  2. Door Size: Select from manufacturer's standard sizes to suit required opening.
  3. Designed for flush installation in wall construction. Construct of metal with concealed continuous hinge, having recessed screwdriver latch, size as indicated.
B. Ceiling Access Doors (Non-Rated):
  1. Approved Products:
    a. "Model RDW"; Karp Associates, Inc.. (800-888-4212)
    b. "Style DW"; Milcor, Inc., a brand of Commercial Products Group of Hart & Cooley, Inc. (800-624-8642)
    c. Model WB-DW; Williams Brothers Corporation of America (800-255-5515)
    d. "WB Series"; J.L. Industries (800-554-6077)
    e. "NW Series"; Nystrom Building Products (800-447-2635)
  2. Performance Criteria
    a. Door Size: Select from manufacturer's standard sizes to suit required opening.
    b. Sheet metal construction with concealed continuous hinge, flush design. Provide each door with self-closing mechanism and standard flush design "self-latching" latch.

SECTION 087100 - DOOR HARDWARE

DOOR HARDWARE SCHEDULE: PREPARED BY OR UNDER THE SUPERVISION OF INSTALLER'S ARCHITECTURAL HARDWARE CONSULTANT. COORDINATE DOOR HARDWARE SCHEDULE WITH DOORS, FRAMES, AND RELATED WORK TO ENSURE PROPER SIZE, THICKNESS, HAND, FUNCTION, AND FINISH OF DOOR HARDWARE.

ARCHITECTURAL HARDWARE CONSULTANT QUALIFICATIONS: A PERSON WHO IS CURRENTLY CERTIFIED BY DHI AS AN ARCHITECTURAL HARDWARE CONSULTANT AND WHO IS EXPERIENCED IN PROVIDING CONSULTING SERVICES FOR DOOR HARDWARE INSTALLATIONS THAT ARE COMPARABLE IN MATERIAL, DESIGN, AND EXTENT TO THAT INDICATED FOR THIS PROJECT.

COORDINATE LAYOUT AND INSTALLATION OF RECESSED AND CONCEALED DOOR HARDWARE WITH SURROUNDING CONSTRUCTION.

COORDINATE INSTALLATION OF DOOR HARDWARE, KEYING, AND ACCESS WITH OWNER'S SECURITY CONSULTANT.

COORDINATE LAYOUT AND INSTALLATION OF ELECTRIFIED DOOR HARDWARE WITH CONNECTIONS TO POWER SUPPLIES AND SECURITY SYSTEMS.

MAINTENANCE TOOLS AND INSTRUCTIONS: FURNISH A COMPLETE SET OF SPECIALIZED TOOLS AND MAINTENANCE INSTRUCTIONS AS NEEDED FOR OWNER'S CONTINUED ADJUSTMENT, MAINTENANCE, AND REMOVAL AND REPLACEMENT OF DOOR HARDWARE.

ACCESSIBILITY REQUIREMENTS: FOR DOOR HARDWARE ON DOORS IN AN ACCESSIBLE ROUTE, COMPLY WITH THE DOJ'S "2010 ADA STANDARDS FOR ACCESSIBLE DESIGN", AND ICC A117.1.

BASIS-OF-DESIGN MANUFACTURER: SUBJECT TO COMPLIANCE WITH REQUIREMENTS, PROVIDE PRODUCTS AS SCHEDULED ON DRAWINGS OR A COMPARABLE PRODUCT BY ONE OF THE FOLLOWING MANUFACTURERS:
  A. THRESHOLDS, SEALS, SWEEPS, GASKETING: REESE ENTERPRISES; ZERO
  B. DOOR CLOSERS: NORTON; SARGENT
  C. HINGES: IVES; STANLEY
  D. LOCKS AND LATCHES: FALCON; SARGENT

DOOR HARDWARE IS SCHEDULED ON DRAWINGS. PROVIDE PRODUCTS FOR EACH DOOR THAT COMPLY WITH THE REQUIREMENTS INDICATED BELOW:
  A. HINGES: BMHA A156.1 PROVIDE TEMPLATE-PRODUCED HINGES FOR HINGES INSTALLED ON HOLLOW-METAL DOORS AND HOLLOW-METAL FRAMES.
  B. CONTINUOUS HINGES: BHMA A156.26; MINIMUM 0.120-INCH- THICK, HINGE LEAVES WITH MINIMUM OVERALL WIDTH OF 4 INCHES; FABRICATED TO FULL HEIGHT OF DOOR AND FRAME AND TO TEMPLATE SCREW LOCATIONS; WITH COMPONENTS FINISHED AFTMILLING AND DRILLING ARE COMPLETE.
  C. LOCK TRIM: ADA COMPLIMENT LEVEL STYLE AS INDICATED ON DRAWINGS.
  D. STRIKES: PROVIDE MANUFACTURER'S STANDARD STRIKE FOR EACH LOCK BOLT OR LATCHBOLT COMPLYING WITH REQUIREMENTS INDICATED FOR APPLICABLE LOCK OR LATCH AND WITH STRIKE BOX AND CURVED LIP EXTENDED TO PROTECT FRAME; FINISHED TO MATCH LOCK OR LATCH.
  E. BORED LOCKS: BHMA A156.2
  F. MORTISE LOCKS: BHMA A156.13
  G. ROLLER LATCHES: BHMA A156.16
  H. MANUAL FLUSH BOLTS: BHMA A156.16
  I. AUTOMATIC AND SELF-LATCHING FLUSH BOLTS: BHMA A156.16
  J. EXIT DEVICES AND AUXILIARY ITEMS: BHMA A156.3
  K. CYLINDERS: MECHANICAL LOCKS SHALL BE COMPATIBLE TO ACCEPT [MFR] INTERCHANGEABLE CORES. CONFIRM REQUIRED CORE SIZES WITH OWNER PRIOR TO PREPARING SUBMITTAL TO ENSURE COMPONENTS WILL WORK WITH EXISTING CONDITIONS AND DESIRED KEYING SYSTEM.
  L. SURFACE CLOSERS: BHMA A156.4; RACK-AND-PINION HYDRAULIC TYPE WITH ADJUSTABLE SWEEP AND LATCH SPEEDS CONTROLLED BY KEY-OPERATED VALVES AND FORGED-STEEL MAIN ARM. COMPLY WITH MANUFACTURER'S WRITTEN INSTRUCTIONS FOR SIZE OF DOOR CLOSERS DEPENDING ON SIZE OF DOOR, EXPOSURE TO WEATHER, AND ANTICIPATED FREQUENCY OF USE. PROVIDE FACTORY-SIZED CLOSERS, ADJUSTABLE TO MEET FIELD CONDITIONS AND REQUIREMENTS FOR OPENING FORCE.
  M. WALL- AND FLOOR-MOUNTED STOPS: BHMA A156.16.
  N. THRESHOLDS: BHMA A156.21; FABRICATED TO FULL WIDTH OF OPENING INDICATED.

SECTION 087100 - DOOR HARDWARE (CONT'D)

ADJUST AND CHECK EACH OPERATING ITEM OF DOOR HARDWARE AND EACH DOOR TO ENSURE PROPER OPERATION OR FUNCTION OF EVERY UNIT. REPLACE UNITS THAT CANNOT BE ADJUSTED TO OPERATE AS INTENDED. ADJUST DOOR CONTROL DEVICES TO COMPENSATE FOR FINAL OPERATION OF HEATING AND VENTILATING EQUIPMENT AND TO COMPLY WITH REFERENCED ACCESSIBILITY REQUIREMENTS.
  A. DOOR CLOSERS: ADJUST SWEEP PERIOD TO COMPLY WITH ACCESSIBILITY REQUIREMENTS AND REQUIREMENTS OF AUTHORITIES HAVING JURISDICTION.

092900 - GYPSUM BOARD

COMPLY WITH ASTM C 840 REQUIREMENTS OR GYPSUM BOARD MANUFACTURER'S WRITTEN INSTRUCTIONS, WHICHEVER ARE MORE STRINGENT.

PERFORMANCE REQUIREMENTS:

  A. FIRE-TEST-RESPONSE CHARACTERISTICS: FOR FIRE-RESISTANCE-RATED ASSEMBLIES THAT INCORPORATE NON-LOAD-BEARING STEEL FRAMING, PROVIDE MATERIALS AND CONSTRUCTION IDENTICAL TO THOSE TESTED IN ASSEMBLY INDICATED, ACCORDING TO ASTM E 119 BY AN INDEPENDENT TESTING AGENCY.
  B. STC-RATED ASSEMBLIES: FOR STC-RATED ASSEMBLIES, PROVIDE MATERIALS AND CONSTRUCTION IDENTICAL TO THOSE TESTED IN ASSEMBLY INDICATED, ACCORDING TO ASTM E 90 AND CLASSIFIED ACCORDING TO ASTM E 413 BY AN INDEPENDENT TESTING AGENCY.

GYPSUM WALLBOARD:

  A. ASTM C 1396C/1396M. SUBJECT TO COMPLIANCE WITH REQUIREMENTS, PROVIDE PRODUCTS BY ONE OF THE FOLLOWING:
    1. GEORGIA-PACIFIC BUILDING PRODUCTS.
    2. NATIONAL GYPSUM COMPANY.
    3. UNITED STATES GYPSUM COMPANY.
  B. THICKNESS: AS INDICATED ON DRAWINGS.
  C. LONG EDGES: TAPERED

MOLD-RESISTANT GYPSUM WALLBOARD:

  A. ASTM C 1396C/1396M WITH MOISTURE AND MOLD-RESISTANT CORE AND PAPER SURFACES. SUBJECT TO COMPLIANCE WITH REQUIREMENTS, PROVIDE PRODUCTS BY ONE OF THE FOLLOWING:
    1. GEORGIA-PACIFIC BUILDING PRODUCTS.
    2. NATIONAL GYPSUM COMPANY.
    3. UNITED STATES GYPSUM COMPANY.
  B. THICKNESS: AS INDICATED ON DRAWINGS.
  C. LONG EDGES: TAPERED
  D. MOLD RESISTANCE: ASTM D 3273, SCORE OF 10 AS RATED ACCORDING TO ASTM D3274.

CEMENTITIOUS BACKER UNITS:

  A. ANSI A118.9 AND ASTM C 1288 OR ASTM C 1325 WITH MANUFACTURER'S STANDARD EDGES. SUBJECT TO COMPLIANCE WITH REQUIREMENTS, PROVIDE PRODUCTS BY ONE OF THE FOLLOWING:
    1. CERTAINTEED CORPORATION
    2. JAMES HARDIE BUILDING PRODUCTS, INC.
    3. NATIONAL GYPSUM COMPANY.
    4. UNITED STATES GYPSUM COMPANY.
  B. THICKNESS: AS INDICATED ON DRAWINGS.
  C. MOLD RESISTANCE: ASTM D 3273, SCORE OF 10 AS RATED ACCORDING TO ASTM D3274.

INTERIOR TRIM SHALL COMPLY WITH ASTM C 1047 AND WILL CONSIST OF GALVANIZED OR ALUMINUM COATED STEEL SHEET OR ROLLED ZINC.

COMPLY WITH ASTM C 475/C475 M FOR JOINT TREATMENT MATERIALS.

PROVIDE AUXILIARY MATERIALS THAT COMPLY WITH REFERENCED INSTALLATION STANDARDS AND MANUFACTURER'S WRITTEN INSTRUCTIONS.

SOUND-ATTENUATION BLANKETS: ASTM C 665, TYPE I (BLANKETS WITHOUT MEMBRANE FACING) PRODUCED BY COMBINING THERMOSETTING RESINS WITH MINERAL FIBERS MANUFACTURED FROM GLASS, SLAG WOOL, OR ROCK WOOL.

COMPLY WITH ASTM C840 FOR THE APPLICATION AND FINISHING OF PANELS.

INSTALL SOUND ATTENUATION BLANKETS BEFORE INSTALLING GYPSUM PANELS UNLESS BLANKETS ARE READILY INSTALLED AFTER PANELS HAVE BEEN INSTALLED ON ONE SIDE.

GYPSUM BOARD FINISH LEVELS: FINISH PANELS TO LEVELS INDICATED BELOW AND ACCORDING TO ASTM C 840:

  A. LEVEL 1: CEILING PLENUM AREAS, CONCEALED AREAS, AND WHERE INDICATED.
  B. LEVEL 2: PANELS THAT ARE SUBSTRATE FOR TILE.
  C. LEVEL 3: AT PANEL SURFACES THAT WILL BE COVERED BY COMMERCIAL GRADE WALL COVERINGS.
  D. LEVEL 4: AT PANEL SURFACES THAT WILL BE EXPOSED TO VIEW IN NON-PUBLIC SPACES.
  E. **LEVEL 5: AT PANEL SURFACES THAT WILL BE EXPOSED TO VIEW IN PUBLIC SPACES.**

SECTION 099113 - EXTERIOR PAINTING

SECTION INCLUDES SURFACE PREPARATION AND THE APPLICATION OF PAINT SYSTEMS ON THE FOLLOWING EXTERIOR SUBSTRATES: GALVANIZED METAL.

ACTION SUBMITTALS
A. PRODUCT DATA: FOR EACH TYPE OF PRODUCT. INCLUDE PREPARATION REQUIREMENTS AND APPLICATION INSTRUCTIONS.
B. SAMPLES FOR VERIFICATION: FOR EACH TYPE OF PAINT SYSTEM AND EACH COLOR AND GLOSS OF TOPCOAT.
  1. SUBMIT SAMPLES ON RIGID BACKING, 8 INCHES SQUARE.
  2. STEP COATS ON SAMPLES TO SHOW EACH COAT REQUIRED FOR SYSTEM.
  3. LABEL EACH COAT OF EACH SAMPLE.
  4. LABEL EACH SAMPLE FOR LOCATION AND APPLICATION AREA.

FURNISH EXTRA MATERIALS THAT MATCH PRODUCTS INSTALLED AND THAT ARE PACKAGED WITH PROTECTIVE COVERING FOR STORAGE AND IDENTIFIED WITH LABELS DESCRIBING CONTENTS.
  1. PAINT: 5 PERCENT, BUT NOT LESS THAN 1 GAL. OF EACH MATERIAL AND COLOR APPLIED.

APPLY PAINTS ONLY WHEN TEMPERATURE OF SURFACES TO BE PAINTED AND AMBIENT AIR TEMPERATURES ARE BETWEEN 50 AND 95 DEG F.

DO NOT APPLY PAINTS IN SNOW, RAIN, FOG, OR MIST; WHEN RELATIVE HUMIDITY EXCEEDS 85 PERCENT; AT TEMPERATURES LESS THAN 5 DEG F ABOVE THE DEW POINT; OR TO DAMP OR WET SURFACES.

BASIS-OF-DESIGN MANUFACTURER: SUBJECT TO COMPLIANCE WITH REQUIREMENTS, PROVIDE PRODUCTS BY THE SHERWIN-WILLIAMS COMPANY OR A COMPARABLE PRODUCT BY ONE OF THE FOLLOWING MANUFACTURERS:
  1. BENJAMIN MOORE & CO.
  2. PPG ARCHITECTURAL FINISHES, INC.

MATERIAL COMPATIBILITY:
  1. PROVIDE MATERIALS FOR USE WITHIN EACH PAINT SYSTEM THAT ARE COMPATIBLE WITH ONE ANOTHER AND SUBSTRATES INDICATED, UNDER CONDITIONS OF SERVICE AND APPLICATION AS DEMONSTRATED BY MANUFACTURER, BASED ON
  2. FOR EACH COAT IN A PAINT SYSTEM, PROVIDE PRODUCTS RECOMMENDED IN WRITING BY MANUFACTURERS OF TOPCOAT FOR USE IN PAINT SYSTEM AND ON SUBSTRATE INDICATED.
B. VOC CONTENT: PROVIDE MATERIALS THAT COMPLY WITH VOC LIMITS OF AUTHORITIES HAVING JURISDICTION.
C. COLORS: AS SELECTED BY OWNER.

PRIMER, GALVANIZED: AS RECOMMENDED IN WRITING BY TOPCOAT MANUFACTURER.

LIGHT INDUSTRIAL COATING, EXTERIOR, WATER BASED SEMI-GLOSS (GLOSS LEVEL 5) :
  1. SHERWIN-WILLIAMS; PRO INDUSTRIAL DTM SEMI-GLOSS B66W01151

TESTING OF PAINT MATERIALS: OWNER RESERVES THE RIGHT TO INVOKE THE FOLLOWING PROCEDURE:
  1. OWNER WILL ENGAGE THE SERVICES OF A QUALIFIED TESTING AGENCY TO SAMPLE PAINT MATERIALS. CONTRACTOR WILL BE NOTIFIED IN ADVANCE AND MAY BE PRESENT WHEN SAMPLES ARE TAKEN. IF PAINT MATERIALS HAVE ALREADY BEEN DELIVERED TO PROJECT SITE, SAMPLES MAY BE TAKEN AT AGENCY.
  2. TESTING AGENCY WILL PERFORM TESTS FOR COMPLIANCE WITH PRODUCT REQUIREMENTS.
  3. OWNER MAY DIRECT CONTRACTOR TO STOP APPLYING PAINTS IF TEST RESULTS SHOW MATERIALS BEING USED DO NOT COMPLY WITH PRODUCT REQUIREMENTS. CONTRACTOR SHALL REMOVE NONCOMPLYING PAINT MATERIALS FROM PROJECT SITE, PAY FOR TESTING, AND REPAINT SURFACES PAINTED WITH REJECTED MATERIALS. CONTRACTOR WILL BE REQUIRED TO REMOVE REJECTED MATERIALS FROM PREVIOUSLY PAINTED SURFACES IF, ON REPAINTING WITH COMPLYING MATERIALS, THE TWO PAINTS ARE INCOMPATIBLE

VERIFY SUITABILITY OF SUBSTRATES, INCLUDING SURFACE CONDITIONS AND COMPATIBILITY WITH EXISTING FINISHES AND PRIMERS.

COMPLY WITH MANUFACTURER'S WRITTEN INSTRUCTIONS AND RECOMMENDATIONS IN "MPI MANUAL" APPLICABLE TO SUBSTRATES AND PAINT SYSTEMS INDICATED.

REMOVE HARDWARE, COVERS, PLATES, AND SIMILAR ITEMS ALREADY IN PLACE THAT ARE REMOVABLE AND ARE NOT TO BE PAINTED. IF REMOVAL IS IMPRACTICAL OR IMPOSSIBLE BECAUSE OF SIZE OR WEIGHT OF ITEM, PROVIDE SURFACE-APPLIED PROTECTION BEFORE SURFACE PREPARATION AND PAINTING.
  1. AFTER COMPLETING PAINTING OPERATIONS, USE WORKERS SKILLED IN THE TRADES INVOLVED TO REINSTALL ITEMS THAT WERE REMOVED. REMOVE SURFACE-APPLIED PROTECTION.

SECTION 099113 - EXTERIOR PAINTING (CONT'D)

GALVANIZED-METAL SUBSTRATES: REMOVE GREASE AND OIL RESIDUE FROM GALVANIZED SHEET METAL BY MECHANICAL METHODS TO PRODUCE CLEAN, LIGHTLY ETCHED SURFACES THAT PROMOTE ADHESION OF SUBSEQUENTLY APPLIED PAINTS.

APPLY PAINTS IN ACCORDANCE WITH MANUFACTURER'S WRITTEN INSTRUCTIONS AND RECOMMENDATIONS IN "MPI MANUAL."

IF UNDERCOATS OR OTHER CONDITIONS SHOW THROUGH TOPCOAT, APPLY ADDITIONAL COATS UNTIL CURED FILM HAS A UNIFORM PAINT FINISH, COLOR, AND APPEARANCE.

APPLY PAINTS TO PRODUCE SURFACE FILMS WITHOUT CLOUDINESS, SPOTTING, HOLIDAYS, LAPS, BRUSH MARKS, ROLLER TRACKING, RUNS, SAGS, ROPINESS, OR OTHER SURFACE IMPERFECTIONS. CUT IN SHARP LINES AND COLOR BREAKS.

DRY FILM THICKNESS TESTING: OWNER MAY ENGAGE THE SERVICES OF A QUALIFIED TESTING AND INSPECTING AGENCY TO INSPECT AND TEST PAINT FOR DRY FILM THICKNESS.
  1. CONTRACTOR SHALL TOUCH UP AND RESTORE PAINTED SURFACES DAMAGED BY TESTING.
  2. IF TEST RESULTS SHOW THAT DRY FILM THICKNESS OF APPLIED PAINT DOES NOT COMPLY WITH PAINT MANUFACTURER'S WRITTEN RECOMMENDATIONS, CONTRACTOR SHALL PAY FOR TESTING AND APPLY ADDITIONAL COATS AS NEEDED TO PROVIDE DRY FILM THICKNESS THAT COMPLIES WITH PAINT MANUFACTURER'S WRITTEN RECOMMENDATIONS.

EXTERIOR PAINTING SCHEDULE
A. GALVANIZED-METAL SUBSTRATES:
  1. WATER-BASED LIGHT INDUSTRIAL COATING SYSTEM:
    A. PRIME COAT: PRIMER, GALVANIZED, WATER BASED, MPI #134.
    B. INTERMEDIATE COAT: LIGHT INDUSTRIAL COATING, EXTERIOR, WATER BASED, MATCHING TOPCOAT.
  C. TOPCOAT: SEMIGLOSS TOPCOAT: LIGHT INDUSTRIAL COATING, EXTERIOR, WATER BASED, SEMIGLOSS (MPI GLOSS LEVEL 5)[**, MPI #163**]

099123 - INTERIOR PAINTING

DEFINITIONS:
  A. MPI GLOSS LEVEL 1: NOT MORE THAN FIVE UNITS AT 60 DEGREES AND 10 UNITS T 85 DEGREES, ACCORDING TO ASTM D 523.
  B. MPI GLOSS LEVEL 2: NOT MORE THAN 10 UNITS AT 60 DEGREES AND 10 TO 35 UNITS AT 85 DEGREES, ACCORDING TO ASTM D 523.
  C. MPI GLOSS LEVEL 3: 10 TO 25 UNITS AT 60 DEGREES AND 10 TO 35 UNITS AT 85 DEGREES, ACCORDING TO ASTM D 523.
  D. MPI GLOSS LEVEL 4: 20 TO 35 UNITS AT 60 DEGREES AND NOT LESS THAN 35 UNITS AT 85 DEGREES, ACCORDING TO ASTM D 523.
  E. MPI GLOSS LEVEL 5: 35 TO 70 UNITS AT 60 DEGREES, ACCORDING TO ASTM D 523.
  F. MPI GLOSS LEVEL 6: 70 TO 85 UNITS AT 60 DEGREES, ACCORDING TO ASTM D 523.
  G. MPI GLOSS LEVEL 7: MORE THAN 85 UNITS AT 60 DEGREES, ACCORDING TO ASTM D 523.

SUBMIT PRODUCT DATA FOR EACH TYPE OF PRODUCT. INCLUDE PREPARATION REQUIREMENTS AND APPLICATION INSTRUCTIONS.
  A. INCLUDE PRINTOUT OF CURRENT "MPI APPROVED PRODUCTS LIST" FOR EACH PRODUCT CATEGORY SPECIFIED, WITH THE PROPOSED PRODUCT HIGHLIGHTED.
  B. INDICATE VOC CONTENT.

LABEL ALL SAMPLE SUBMITTALS FOR LOCATION AND APPLICATION AREA.

FURNISH EXTRA MATERIALS THAT MATCH PRODUCTS INSTALLED AND THAT AR PACKAGED WITH PROTECTIVE COVERING FOR STORAGE AND IDENTIFIED WITH LABEL DESCRIBING CONTENTS. NOT LESS THAN 1 GALLON OF EACH MATERIAL SPECIFIED.

APPLY PAINTS ONLY WHEN TEMPERATURE OF SURFACES TO BE PAINTED AND AMBIENT AIR TEMPERATURES ARE BETWEEN 50 AND 95 DEGREES F.

DO NOT APPLY PAINTS WHEN RELATIVE HUMIDITY EXCEEDS 85 PERCENT; AT TEMPERATURES LESS THAN 5 DEGREES F ABOVE THE DEW POINT; OR TO DAMP OR WET SURFACES.

MANUFACTURERS SUBJECT TO COMPLIANCE WITH REQUIREMENTS, AVAILABLE MANUFACTURES OFFERING PRODUCTS THAT MAY BE INCORPORATED INTO THE WORK INCLUDE, BUT ARE NOT LIMITED TO THE FOLLOWING: BENJAMIN MOORE, DULUX (FORMERLY ICI),
  1. PPG
  2. SHERWIN - WILLIAMS.

VERIFY SUITABILITY OF SUBSTRATES, INCLUDING SURFACE CONDITIONS AND COMPATIBILITY, WITH EXISTING FINISHES AND PRIMERS.

COMPLY WITH MANUFACTURER'S WRITTEN INSTRUCTIONS AND RECOMMENDATIONS IN "MPI ARCHITECTURAL PAINTING SPECIFICATION MANUAL" APPLICABLE TO SUBSTRATES AND PAITN SYSTEMS INDICATED.

REMOVE HARDWARE, COVERS, PLATES, AND SIMILAR ITEMS ALREADY IN PLACE THAT ARE REMOVABLE AND ARE NO TO BE PAINTED. IF REMOVAL IS IMPRACTICAL OR IMPOSSIBLE BECAUSE OF SIZE OR WEIGHT OF ITEM, PROVIDE SURFACE-APPLIED PROTECTION BEFORE SURFACE PREPARATION AND PAINTING.

AFTER COMPLETING PAINTING OPERATIONS, USE WORKERS SKILLED IN THE TRADES INVOLVED TO REINSTALL ITEMS THAT WERE REMOVED. REMOVE SURFACE-APPLIED PROTECTION IF ANY.

CONCRETE SUBSTRATES: REMOVE RELEASE AGENTS, CURING COMPOUNDS, EFFLORESCENCE, AND CHALK. DO NOT PAINT SURFACES IF MOISTURE CONTENT OR ALKALINITY OF SURFACES TO BE PAINTED EXCEEDS THAT PERMITTED IN MANUFACTURER'S WRITTEN INSTRUCTIONS.

MASONRY SUBSTRATES: REMOVE EFFLORESCENCE AND CHALK. DO NOT PAINT SURFACES IF MOISTURE CONTENT OR ALKALINITY OF SURFACES OR MORTAR JOINTS EXCEEDS THAT PERMITTED IN MANUFACTURER'S WRITTEN INSTRUCTIONS.

STEEL SUBSTRATES: REMOVE RUST, LOOSE MILL SCALE, AND SHOP PRIMER, IF ANY. CLEAN USING METHODS RECOMMENDED IN WRITING BY PAINT MANUFACTURER.

SHOP-PRIMED STEEL SUBSTRATES: CLEAN FIELD WELDS, BOLTED CONNECTIONS, AND AREAS WHERE SHOP PAINT IS ABRADED. PAINT EXPOSED AREAS WITH THE SAME MATERIAL AS USED FOR SHOP PRIMING TO COMPLY WITH SSPC-PA FOR TOUCHING UP SHOP-PRIMED SURFACES

GALVANIZED-METAL SUBSTRATES: REMOVE GREASE AND OIL RESIDUE FROM GALVANIZED SHEET METAL BY MECHANICAL METHODS TO PRODUCE CLEAN, LIGHTLY ETCHED SURFACES THAT PROMOTE ADHESION OF SUBSEQUENTLY APPLIED PAINTS.

ALUMINUM SUBSTRATES: REMOVE LOOSE SURFACE OXIDATION.

WOOD SUBSTRATES:
  A. SCRAPE AND CLEAN KNOTS, AND APPLY COAT OF KNOW SEALER BEFORE APPLYING PRIMER.
  B. SAND SURFACES THAT WILL BE EXPOSED TO VIEW, AND DUST OFF.
  C. PRIME EDGES, ENDS, FACES, UNDERSIDES, AND BACKSIDES OF WOOD.
  D. AFTER PRIMING, FILL HOLES AND IMPERFECTIONS IN THE FINISH SURFACES WITH PUTTY OR PLASTIC WOOD FILLER. SAND SMOOTH WHEN DRIED.

APPLY PAINTS ACCORDING TO MANUFACTURER'S WRITTEN INSTRUCTIONS

IF UNDERCOATS OR OTHER CONDITIONS SHOW THROUGH TOPCOAT, APPLY ADDITIONAL COATS UNTIL CURED FILM HAS A UNIFORM PAINT FINISH, COLOR, AND APPEARANCE.

PAINTING MECHANICAL AND ELECTRICAL WORK: PAINT ITEMS EXPOSED IN EQUIPMENT ROOMS AND OCCUPIED SPACES INCLUDING, BUT NOT LIMITED TO, THE FOLLOWING:
  A. PRIMED METAL SURFACES OF EQUIPMENT (ELECTRICAL AND MECHANICAL)
  B. DUCTS WHERE EXPOSED IN OCCUPIED SPACES, VERIFY LOCATIONS WITH ARCHITECT.
  C. OTHER ITEMS AS DIRECTED BY ARCHITECT.

DRY FILM THICKNESS TESTING: OWNER MAY ENGAGE THE SERVICES OF A QUALIFIED TESTING AND INSPECTING AGENCY TO INSPECT AND TEST PAINT FOR DRY FILM THICKNESS.
  A. CONTRACTOR SHALL TOUCH UP AND RESTORE PAINTED SURFACES DAMAGED BY TESTING.
  B. IF TESTS RESULTS SHOW THAT DRY FILM THICKNESS OF APPLIED PAINT DOES NOT COMPLY WITH PAINT MANUFACTURER'S WRITTEN RECOMMENDATIONS, CONTRACTOR SHALL PAY FOR TESTING AND APPLY ADDITIONAL COATS AS NEEDED TO PROVIDE DRY FILM THICKNESS THAT COMPLIES WITH PAINT MANUFACTURER'S WRITTEN RECOMMENDATIONS.

INTERIOR PAINTING SCHEDULE
  A. STEEL SUBSTRATES:
    1. WATER-BASED LIGHT INDUSTRIAL COATING SYSTEM:
      a. PRIME COAT: PRIMER, RUST-INHIBITIVE, WATER BASED MPI #107.
      b. PRIME COAT: SHOP PRIMER SPECIFIED IN SECTION WHERE SUBSTRATE IS SPECIFIED.
      c. INTERMEDIATE COAT: ALKYD, INTERIOR, MATCHING TOPCOAT.
      d. TOPCOAT: ALKYD, INTERIOR, SEMI-GLOSS (GLOSS LEVEL 5) MPI #47
  B. WOOD SUBSTRATES: INCLUDING DOORS AND FRAMES.
    1. LATEX SYSTEM:
      a. PRIME COAT: PRIMER, LATEX, FOR INTERIOR WOOD, MPI #39.
      b. INTERMEDIATE COAT: LATEX, INTERIOR, MATCHING TOPCOAT.
      c. TOPCOAT: LATEX, INTERIOR, (GLOSS LEVEL 4) MPI #43.
  C. GYPSUM BOARD AND PLASTER SUBSTRATES:
    1. LATEX SYSTEM:
      a. PRIME COAT: PRIMER SEALER, LATEX, INTERIOR, MPI #150.
      b. INTERMEDIATE COAT: LATEX, INTERIOR, MATCHING TOPCOAT.
      c. TOPCOAT: LATEX, INTERIOR, FLAT (GLOSS LEVEL 1) MPI #53 FOR CEILINGS.
      d. TOPCOAT: LATEX, INTERIOR, EGGSHELL (GLOSS LEVEL 3) MPI #52 FOR WALLS.

BUNCOMBE COUNTY SPORTS PARK
RESTROOM BUILDING

58 APAC DRIVE
ASHEVILLE, NC

Prepared For
BUNCOMBE COUNTY

58 APAC DRIVE, ASHEVILLE,
NC

DOMOKUR ARCHITECTS

4651 Medina Road
Akron, Ohio 44321-1315
p 330.666.7878

43 South Broad Street, Suite 201
Brevard, North Carolina 28712-3738
p 828.884.8478
www.domokur.com

MICHAEL G. DOMOKUR
RALEIGH, NC

PRELIMINARY
NOT FOR CONSTRUCTION
This document may not be reproduced in any manner without the express written authorization of Domokur Architects

Issue	Date	Description
1	11/17/2023	ISSUED FOR BID AND PERMIT

SPECIFICATIONS

Project No: 2022090
Project Manager: MTT
Drawn By: Author

A002

SECTION 099300 - STAINING AND TRANSPARENT FINISHING

SECTION INCLUDES SURFACE PREPARATION AND APPLICATION OF WOOD FINISHES ON THE FOLLOWING SUBSTRATES: EXTERIOR SUBSTRATES: EXPOSED WOOD DECKING AND FRAMING

ACTION SUBMITTALS
- A. PRODUCT DATA: FOR EACH TYPE OF PRODUCT INDICATED. INCLUDE PREPARATION REQUIREMENTS AND APPLICATION INSTRUCTIONS.
- B. SAMPLES FOR VERIFICATION: FOR EACH TYPE OF FINISH SYSTEM AND IN EACH COLOR AND GLOSS OF FINISH INDICATED.
  - 1. SUBMIT SAMPLES ON REPRESENTATIVE SAMPLES OF ACTUAL WOOD SUBSTRATES, 8 INCHES SQUARE.
  - 2. LABEL EACH SAMPLE FOR LOCATION AND APPLICATION AREA.
- C. PRODUCT LIST: FOR EACH PRODUCT INDICATED, INCLUDE THE FOLLOWING:
  - 1. CROSS-REFERENCE TO FINISH SYSTEM AND LOCATIONS OF APPLICATION AREAS. USE SAME DESIGNATIONS INDICATED ON DRAWINGS AND IN SCHEDULES.
  - 2. PRINTOUT OF CURRENT "MPI APPROVED PRODUCTS LIST" FOR EACH PRODUCT CATEGORY SPECIFIED IN PART 2, WITH THE PRODUCT PROPOSED FOR USE HIGHLIGHTED.
- D. VOC CONTENT.

FURNISH EXTRA MATERIALS THAT MATCH PRODUCTS INSTALLED AND THAT ARE PACKAGED WITH PROTECTIVE COVERING FOR STORAGE AND IDENTIFIED WITH LABELS DESCRIBING CONTENTS.
- A. PAINT: 5 PERCENT, BUT NOT LESS THAN 1 GAL. OF EACH MATERIAL AND COLOR APPLIED.

APPLY FINISHES ONLY WHEN TEMPERATURE OF SURFACES TO BE FINISHED AND AMBIENT AIR TEMPERATURES ARE BETWEEN 50 AND 95 DEG F.

DO NOT APPLY FINISHES WHEN RELATIVE HUMIDITY EXCEEDS 85 PERCENT; AT TEMPERATURES LESS THAN 5 DEG F ABOVE THE DEW POINT; OR TO DAMP OR WET SURFACES. DO NOT APPLY EXTERIOR FINISHES IN SNOW, RAIN, FOG, OR MIST.

MPI STANDARDS: PROVIDE PRODUCTS THAT COMPLY WITH MPI STANDARDS INDICATED AND THAT ARE LISTED IN ITS "MPI APPROVED PRODUCTS LIST."

BASIS-OF-DESIGN MANUFACTURER: SUBJECT TO COMPLIANCE WITH REQUIREMENTS, PROVIDE PRODUCTS BY THE SHERWIN-WILLIAMS COMPANY OR A COMPARABLE PRODUCT BY ONE OF THE FOLLOWING MANUFACTURERS:
- A. PPG ARCHITECTURAL FINISHES, INC.
- B. CLOVERDALE PAINT

TRANSPARENT FINISHES
- A. VARNISH, EXTERIOR, WATER BASED, SATIN: WATER-BASED CLEAR VARNISH FOR EXTERIOR WOOD SURFACES, MPI GLOSS LEVEL 4
  - 1. SHERWIN-WILLIAMS; MINWAX HELMSMAN SPAR WATER BASED URETHANE SATIN 10520/30520

INSECT REPELLENT COATINGS ADDITIVE
- A. ADDITIVE FOR USE IN EXTERIOR OIL OR WATER-BASED COATINGS FOR TIME RELEASED INSECT REPELLENCY.
- B. BASIS-OF-DESIGN MANUFACTURER: SUBJECT TO COMPLIANCE WITH REQUIREMENTS, PROVIDE WALLA WALL ENVIRONMENTAL; BUG-JUICE PAINT ADDITIVE OR A COMPARABLE PRODUCT BY ONE OF THE FOLLOWING MANUFACTURERS:
  - 1. CTA PRODUCTS GROUP; NBS 90 INSECT REPELLENT COATINGS ADDITIVE.
  - 2. SUBSTITUTIONS: PERMITTED UPON REVIEW AND ACCEPTANCE BY OWNER.

MATERIAL COMPATIBILITY:
- A. PROVIDE MATERIALS FOR USE WITHIN EACH FINISH SYSTEM THAT ARE COMPATIBLE WITH ONE ANOTHER AND SUBSTRATES INDICATED, UNDER CONDITIONS OF SERVICE AND APPLICATION AS DEMONSTRATED BY MANUFACTURER, BASED ON TESTING AND FIELD EXPERIENCE.
- B. FOR EACH COAT IN A FINISH SYSTEM, PROVIDE PRODUCTS RECOMMENDED IN WRITING BY MANUFACTURERS OF TOPCOAT FOR USE IN FINISH SYSTEM AND ON SUBSTRATE INDICATED.

VOC CONTENT: PRODUCTS SHALL COMPLY WITH VOC LIMITS OF AUTHORITIES HAVING JURISDICTION.

- A. TESTING OF MATERIALS: OWNER RESERVES THE RIGHT TO INVOKE THE FOLLOWING PROCEDURE:
  - 1. OWNER WILL ENGAGE THE SERVICES OF A QUALIFIED TESTING AGENCY TO SAMPLE WOOD FINISHING MATERIALS. CONTRACTOR WILL BE NOTIFIED IN ADVANCE AND MAY BE PRESENT WHEN SAMPLES ARE TAKEN. IF MATERIALS HAVE ALREADY BEEN DELIVERED TO PROJECT SITE, SAMPLES MAY BE TAKEN AT PROJECT SITE. SAMPLES WILL BE IDENTIFIED, SEALED, AND CERTIFIED BY TESTING AGENCY.
  - 2. TESTING AGENCY WILL PERFORM TESTS FOR COMPLIANCE WITH PRODUCT REQUIREMENTS.
  - 3. OWNER MAY DIRECT CONTRACTOR TO STOP APPLYING WOOD FINISHES IF TEST RESULTS SHOW MATERIALS BEING USED DO NOT COMPLY WITH PRODUCT REQUIREMENTS. CONTRACTOR SHALL REMOVE NONCOMPLYING MATERIALS FROM PROJECT SITE, PAY FOR TESTING, AND REFINISH SURFACES FINISHED WITH REJECTED MATERIALS. CONTRACTOR WILL BE REQUIRED TO REMOVE REJECTED MATERIALS FROM PREVIOUSLY FINISHED SURFACES BEFORE REFINISHING WITH COMPLYING MATERIALS IF THE TWO FINISHES ARE INCOMPATIBLE OR PRODUCE RESULTS THAT, IN THE OPINION OF THE ARCHITECT,ARE AESTHETICALLY UNACCEPTABLE.

MAXIMUM MOISTURE CONTENT OF EXTERIOR WOOD SUBSTRATES: 15 PERCENT, WHEN MEASURED WITH AN ELECTRONIC MOISTURE METER.

COMPLY WITH MANUFACTURER'S WRITTEN INSTRUCTIONS AND RECOMMENDATIONS IN "MPI ARCHITECTURAL PAINTING SPECIFICATION MANUAL" APPLICABLE TO SUBSTRATES INDICATED.

- A. REMOVE HARDWARE, COVERS, PLATES, AND SIMILAR ITEMS ALREADY IN PLACE THAT ARE REMOVABLE. IF REMOVAL IS IMPRACTICAL OR IMPOSSIBLE BECAUSE OF SIZE OR WEIGHT OF ITEM, PROVIDE SURFACE-APPLIED PROTECTION BEFORE SURFACE PREPARATION ANDFINISHING.
  - 1. AFTER COMPLETING FINISHING OPERATIONS, USE WORKERS SKILLED IN THE TRADES INVOLVED TO REINSTALL ITEMS THAT WERE REMOVED. REMOVE SURFACE-APPLIED PROTECTION IF ANY.
- B. CLEAN AND PREPARE SURFACES TO BE FINISHED ACCORDING TO MANUFACTURER'S WRITTEN INSTRUCTIONS FOR EACH SUBSTRATE CONDITION AND AS SPECIFIED.
  - 1. REMOVE DUST, DIRT, OIL, AND GREASE BY WASHING WITH A DETERGENT SOLUTION; RINSE THOROUGHLY WITH CLEAN WATER AND ALLOW TO DRY. REMOVE GRADE STAMPS AND PENCIL MARKS BY SANDING LIGHTLY. REMOVE LOOSE WOOD FIBERS BY BRUSHING.
  - 2. REMOVE MILDEW BY SCRUBBING WITH A COMMERCIAL WASH FORMULATED FOR MILDEW REMOVAL AND AS RECOMMENDED BY STAIN MANUFACTURER.
- C. EXTERIOR WOOD SUBSTRATES:
  - 1. SCRAPE AND CLEAN KNOTS, AND APPLY COAT OF KNOT SEALER BEFORE APPLYING PRIMER.
  - 2. PRIME EDGES, ENDS, FACES, UNDERSIDES, AND BACKSIDES OF WOOD.
    - a. FOR SOLID HIDE STAINED WOOD, STAIN EDGES AND ENDS AFTER PRIMING.
    - b. FOR VARNISH-COATED STAINED WOOD, STAIN EDGES AND ENDS AND PRIME WITH VARNISH. PRIME UNDERSIDES AND BACKSIDES WITH VARNISH.
  - 3. COUNTERSINK STEEL NAILS, IF USED, AND FILL WITH PUTTY OR PLASTIC WOOD FILLER TINTED TO FINAL COLOR. SAND SMOOTH WHEN DRIED.

APPLY FINISHES ACCORDING TO MANUFACTURER'S WRITTEN INSTRUCTIONS AND RECOMMENDATIONS IN "MPI ARCHITECTURAL PAINTING SPECIFICATION MANUAL."

EXTERIOR WOOD-FINISH-SYSTEM SCHEDULE
WOOD SUBSTRATES, NONTRAFFIC SURFACES, EXPOSED FRAMING INCLUDING EXPOSED BEAMS AND COLUMNS, EXPOSED WOOD DECKING, HEAVY TIMBER CONSTRUCTION, ETC.
- A. WATER-BASED VARNISH SYSTEM:
  - 1. PRIME COAT: WATER-BASED VARNISH MATCHING TOPCOAT.
  - 2. INTERMEDIATE COAT: WATER-BASED VARNISH MATCHING TOPCOAT.
  - 3. TOPCOAT: WATER-BASED VARNISH, SATIN, MPI GLOSS LEVEL 4.

SECTION 102113.19 - PLASTIC TOILET PARTITIONS

SECTION INCLUDES
- A. Extent of toilet partitions is indicated on Drawings.
- B. Styles of toilet partitions include:
  - 1. Solid Phenolic-Black Core, Ceiling-Anchored
- C. Styles of Screens include:
  - 1. None

TOILET PARTITIONS (TP-1)
- A. Approved Manufacturers:
  - 1. Basis of Design: ASI Accurate Partitions Corp. (708-442-6800)
    - A. FINISHES: Color and Pattern: As selected by Owner/Architect from manufacturer's standard range.
  - 2. Bobrick Washroom Equipment (818-764-1000) Solid Color
  - 3. Metpar Corporation (516-333-2600) Solid Phenolic

MATERIALS
- A. General: Provide materials which have been selected for surface flatness and smoothness. Exposed surfaces which exhibit pitting, seam marks, roller marks, stains, discolorations, telegraphing of core material, or other imperfections on finished units are not acceptable.
- B. Doors, panels, pilasters and urinal screens shall be fabricated from phenolic material comprised of multiple layers of melamine resin impregnated kraft paper, and a decorative surface sheet on both faces. All layers shall be fused together under high temperature and pressure.
- C. Door, Panel and Pilaster Construction: Solid phenolic core and decorative surface sheet on both faces
- D. Provide minimum 3/4-inch thick doors and pilasters and minimum 1/2-inch thick panels.
- E. Pilaster Shoes and Sleeves (Caps): Stainless steel, ASTM A 666, Type 302 or 304, not less than 0.0312 inch specified thickness and 3 inches high, finished to match hardware.
- F. Brackets (Fittings):
  - 1. Full-Height (Continuous) Type: Manufacturer's standard design; stainless steel with stainless steel theft-resistant barrel nuts and machine screws of same material and finish.
- G. Hardware and Accessories: Manufacturer's standard design, heavy-duty operating hardware and accessories of stainless steel. Furnish hardware for each compartment in partition system, as follows:
  - 1. Anchorages and Fasteners: Manufacturer's standard exposed fasteners of stainless steel, finished to match hardware, with theft-resistant type heads and nuts. For concealed anchors, use hot-dip galvanized, cadmium-plated, or other rust-resistant protective-coated steel.
  - 2. Hinges: Cutout inset type, adjustable to hold door open at any angle up to 90 degrees. Provide gravity type, spring-action cam type, or concealed torsion rod type, to suit manufacturer's standards.
  - 3. Latch and Keeper: Manufacturer's standard surface-mounted latch unit, designed for emergency access, with combination rubber-faced door strike and keeper.
    - a. Provide ADA accessible type latch at each designated handicapped stall.
  - 4. Coat Hook: Provide manufacturer's standard stainless steel coat hook and rubber-tipped bumper at each compartment door, sized to prevent door hitting mounted accessories. Hook shall project no more than 1 1/8" from face of door. Coat hook shall be secured by theft resistant, one-way, stainless steel screws.
  - 5. Door Pull: Manufacturer's standard unit for out-swing doors. Provide pulls on both faces of handicap compartment doors. Design shall be in conformance with ADA requirements.
  - 6. Door Stop: Stainless steel with rubber-tipped bumper.

SECTION 104260 - SIGNS

SECTION INCLUDES
- A. UNDER THIS SECTION OF THE SPECIFICATIONS, THE CONTRACTOR SHALL PROVIDE ALL LABOR, MATERIALS, TOOLS, AND EQUIPMENT NECESSARY TO COMPLETE THE FOLLOWING IN ACCORDANCE WITH THE DRAWINGS AND SPECIFICATIONS.

B. FURNISH AND INSTALL THE FOLLOWING SIGNAGE COMPLETE, IN PLACE, AS SPECIFIED HEREIN AND NEEDED FOR A COMPLETE AND PROPER INSTALLATION:
  - 1. TOILET DOOR AND MISCELLANEOUS DOOR SIGNS.
  - 2. **FIRE EXTINGUISHER SIGNS**

MATERIALS
- A. ADA COMPLIANT SIGNAGE: SOLID PLASTIC - BACKING COLOR (CHARCOAL/BRONZE) AND LETTER COLOR (WHITE) OR AS SELECTED BY OWNER/ARCHITECT FROM MANUFACTURER'S STANDARD COLORS.
  - a. MEN'S
  - b. WOMEN'S
  - c. FAMILY
  - d. MAINTENANCE

SECTION 108000 - TOILET ROOM ACCESSORIES

PART 1 GENERAL

SCOPE OF WORK
- A. UNDER THIS SECTION OF THE SPECIFICATIONS THE CONTRACTOR SHALL FURNISH ALL LABOR, MATERIALS, TOOLS, AND EQUIPMENT REQUIRED TO FURNISH AND INSTALL TOILET ROOM ACCESSORIES IN ACCORDANCE WITH THE DRAWINGS AND SPECIFICATIONS.

RELATED WORK SPECIFIED ELSEWHERE
- A. THE CONTRACTOR SHALL COORDINATE REQUIRED BLOCKING, NAILERS, ROUGH OPENINGS, ETC., WITH OTHER WORK AS REQUIRED FOR THE INSTALLATION OF ALL TOILET ROOM ACCESSORIES.
  - a. TOILET PARTITIONS

REGULATORY REQUIREMENTS
- A. A. LOCATIONS AND MOUNTING HEIGHTS SHALL CONFORM TO THE ADA ACCESSIBILITY GUIDELINES AND ALL APPLICABLE CODES.

GENERAL
A. UNLESS NOTED OTHERWISE, ALL TOILET ROOM ACCESSORIES SHALL BE THE PRODUCTS OF THE BOBRICK WASHROOM EQUIPMENT COMPANY OR APPROVED EQUAL.

MATERIALS
- A. GRAB BARS **(TA-1)(TA-2)(TA-3)** - GRAB BARS SHALL BE NO. B6861.99, NON-SLIP FINISH, 18 GAUGE, TYPE 304 SATIN FINISH STAINLESS STEEL, 1-1/2 INCH DIAMETER WITH CONCEALED MOUNTINGS. GRAB BARS SHALL BE DESIGNED AND INSTALLED TO CONFORM TO THE ADA ACCESSIBILITY GUIDELINES AND ALL APPLICABLE CODES.
- B. MIRRORS **(TA-4)** - MIRRORS SHALL BE MODEL NO. B-290, TYPE 304 STAINLESS STEEL WITH SATIN FINISH, SIZE 18 INCHES BY 30 INCHES UNLESS DETAILED OTHERWISE ON THE DRAWINGS. THE MIRROR FRAME SHALL BE ONE PIECE, ROLL-FORMED, 3/4 INCH BY 3/4 INCH ANGLE WITH CONTINUOUS INTEGRAL STIFFENER ON ALL SIDES. MIRROR SHALL BE NO. 1 QUALITY, 1/4 INCH SELECT FLOAT GLASS MIRROR ELECTROLYTICALLY COPPER-PLATED, GUARANTEED AGAINST SILVER SPOILAGE FOR 15 YEARS AND PROTECTED BY FILLER STRIPS AND SHOCK ABSORBING PADDING. THE MIRROR SHALL BE INSTALLED ON CONCEALED WALL HANGER AND SECURED IN PLACE WITH THEFT-PROOF LOCKING SCREWS.
- C. MOP AND BROOM HOLDER **(TA-5)** - MOP AND BROOM HOLDER SHALL BE MODEL B-223, SURFACE MOUNTED, TYPE 304 STAINLESS STEEL SATIN FINISH, WITH SPRING LOADED RUBBER CAM TO HOLD 7/8 INCH HANDLES, 24 INCHES LONG WITH THREE HOLDERS.
- D. TOILET TISSUE DISPENSER **(TA-6)** - PROVIDED BY OWNER, INSTALLED BY CONTRACTOR
- E. SANITARY NAPKIN DISPOSAL **(TA-7)** - PROVIDED BY OWNER, INSTALLED BY CONTRACTOR
- F. SOAP DISPENSER **(TA-8)** - PROVIDED BY OWNER, INSTALLED BY CONTRACTOR
- G. **(TA-9)** - REFER TP ELECTRICAL FOR ELECTRIC HAND DRYER
- H. SANITARY NAPKIN/TAMPON VENDOR **(TA-10)** - PROVIDED BY OWNER, INSTALLED BY CONTRACTOR
- I. BABY CHANGING STATION **(TA-11)** -

BUNCOMBE COUNTY SPORTS PARK
RESTROOM BUILDING

58 APAC DRIVE
ASHEVILLE, NC

Prepared For
BUNCOMBE COUNTY

58 APAC DRIVE, ASHEVILLE, NC

DOMOKUR | ARCHITECTS

4651 Medina Road
Akron, Ohio 44321-1315
p 330.666.7878

43 South Broad Street, Suite 201
Brevard, North Carolina 28712-3738
p 828.884.8478

www.domokur.com

MICHAEL G. DOMOKUR
REGISTERED ARCHITECT
NORTH CAROLINA
RALEIGH, NC
PRELIMINARY
NOT FOR CONSTRUCTION
This document may not be reproduced in any manner without the express written authorization of Domokur Architects

Issue	Date	Description
1	11/17/2023	ISSUED FOR BID AND PERMIT

SPECIFICATIONS

Project No: 2022090
Project Manager: MTT
Drawn By: Author

A003

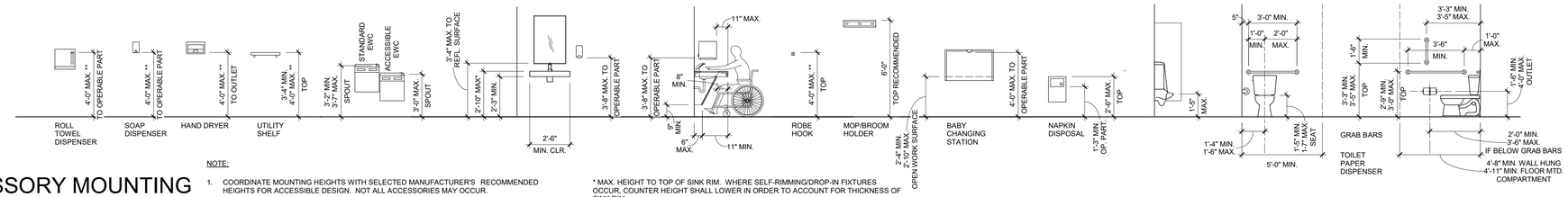

TOILET ACCESSORY MOUNTING LOCATION KEY

NOTE:

1. COORDINATE MOUNTING HEIGHTS WITH SELECTED MANUFACTURER'S RECOMMENDED HEIGHTS FOR ACCESSIBLE DESIGN. NOT ALL ACCESSORIES MAY OCCUR.
2. WHERE MIN./MAX DIMENSIONS ARE PROVIDED, FIXTURE MUST FALL WITHIN RANGE. "CONSTRUCTION TOLERANCES" (EX. +/- 1/4", +/- 1/2", ETC.) OUTSIDE OF RANGE SHALL NOT BE PERMITTED.

* MAX. HEIGHT TO TOP OF SINK RIM. WHERE SELF-RIMMING/DROP-IN FIXTURES OCCUR, COUNTER HEIGHT SHALL LOWER IN ORDER TO ACCOUNT FOR THICKNESS OF SINK RIM.

** ASSUMES UNOBSTRUCTED SIDE REACH

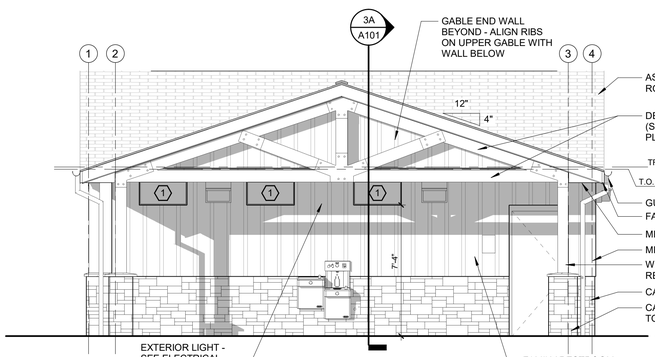

SOUTH ELEVATION

5 A100 SCALE: 1/4" = 1'-0"

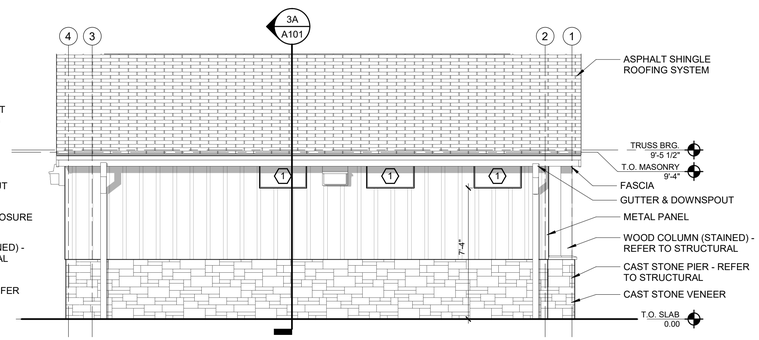

NORTH ELEVATION

4 A100 SCALE: 1/4" = 1'-0"

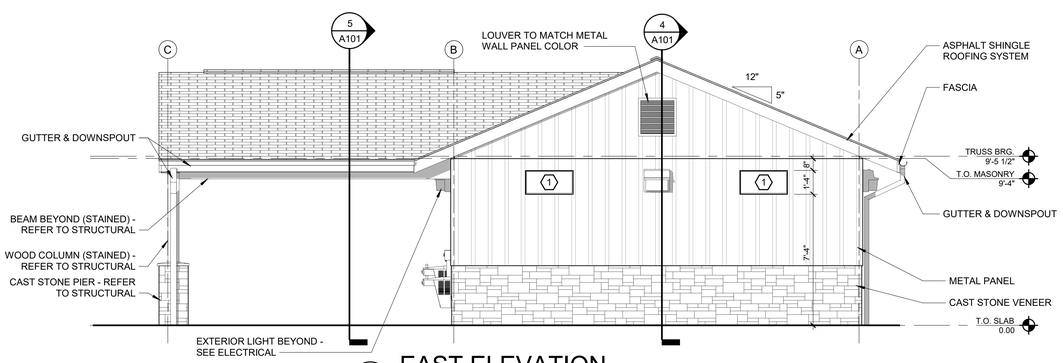

EAST ELEVATION

3 A100 SCALE: 1/4" = 1'-0"

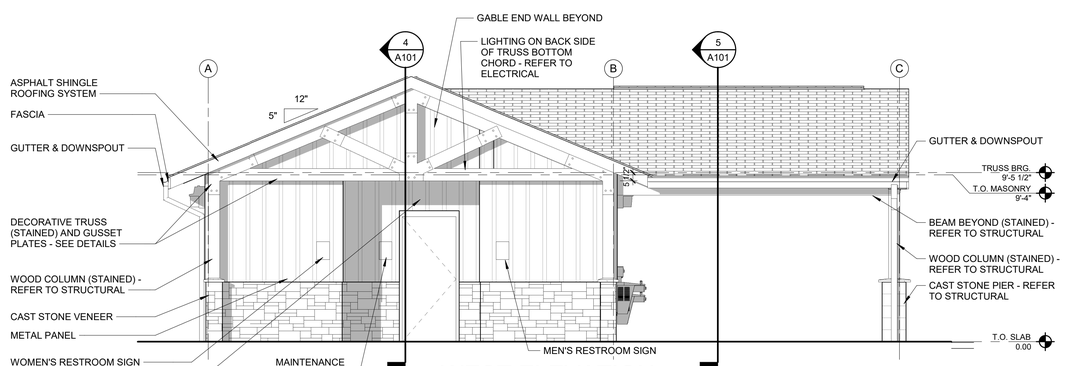

WEST ELEVATION

2 A100 SCALE: 1/4" = 1'-0"

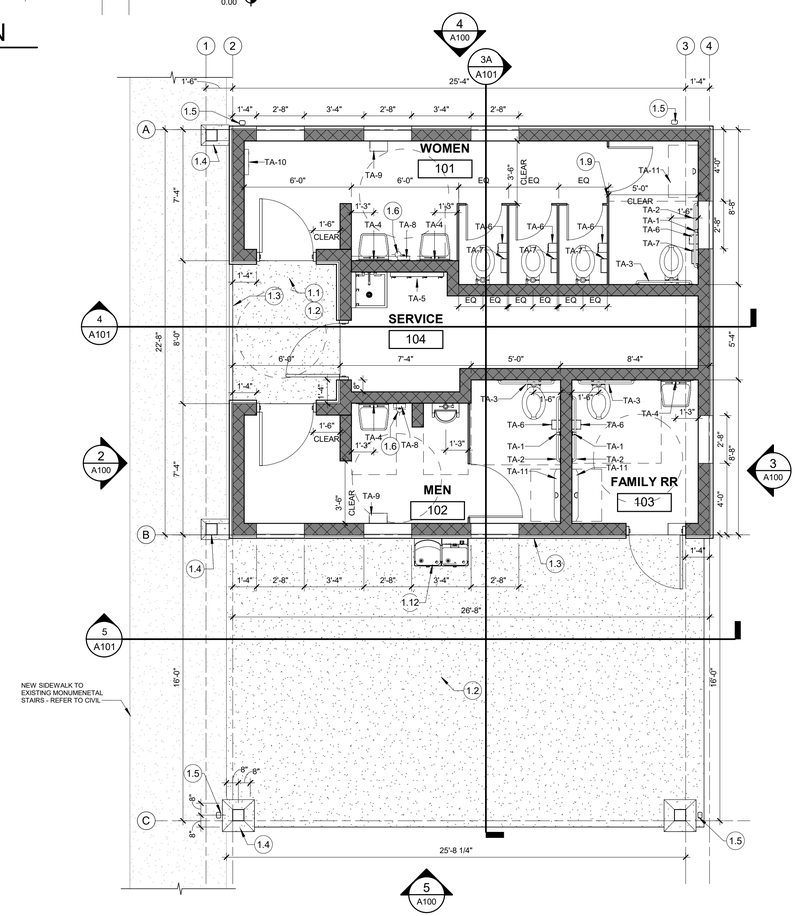

FIRST FLOOR PLAN

1 A100 SCALE: 1/4" = 1'-0"

NORTH

GENERAL NOTES

A. DIMENSIONS SHOWN ARE TO FACE OF STUD / FURRING OR FACE OF C.M.U. UNLESS NOTED OTHERWISE

B. PROVIDE MASONRY CONTROL JOINTS (C.J.) IN MASONRY AS REQUIRED BY SPECIFICATIONS

C. ALL CEMENT BOARD EDGES SHALL BE LOCATED ON A SUPPORT

D. FURNISHINGS AND EQUIPMENT BY OWNER ARE NOTED AS N.I.C.

E. REFER TO AND COORDINATE WITH CIVIL, STRUCTURAL, MECHANCIAL, ELECTRICAL AND PLUMBING DRAWINGS.

F. WD FRAMING AND SILL PLATES IN CONTACT WITH CONCRETE SLAB ON GRADE AND WITH MASONRY WALLS SHALL BE PRESERVATIVE TREATED.

G. RUN ALL INTERIOR WALLS TO TRUSS BR'G UNO.

H. ALL WALLS ARE 8" CMU UNLESS NOTED OTHERWISE.

A100 SHEET SPECIFIC NOTES (#)

THE FOLLOWING NOTES APPLY TO THIS SHEET ONLY:

1.1 FROST SLAB - REFER TO TYPICAL STRUCTURAL DETAILS
1.2 BRUSHED CONCRETE. PROVIDE SAW CUT CONTROL JOINTS @ 6'-0" MAX. - SEE STRUCTURAL FOR SLAB DESIGN
1.3 PROVIDE 1/2" EXPANSION JOINT AROUND PERIMETER OF PORCH CONCRETE PAD, FROST SLAB AND ANY SITE CONCRETE THAT ABUTS THE BUILDING
1.4 MASONRY PIER WITH CAST STONE VENEER, PRECAST-CAP AND WOOD TIMBER COLUMN (STAINED) - REFER TO STRUCTURAL
1.5 DOWNSPOUT AND STUB-UP ADAPTER- REFER TO CIVIL FOR ADDITIONAL INFORMATION
1.6 HOSE BIBB - REFER TO MEP
1.9 PHENOLIC CEILING MOUNTED TOILET PARTITION - REFER TO STRUCTURAL
1.12 ELECTRIC WATER COOLER - REFER TO MEP

(1) FROSTED GLASS BLOCK

TOILET ACCESSORY SCHEDULE

TA-1	18" VERTICAL SIDE GRAB BAR
TA-2	42" LONG GRAB BAR
TA-3	36" LONG GRAB BAR
TA-4	MIRROR
TA-5	Bobrick B-223 x 36 Surface Mounted Mop and Broom Holder
TA-6	TOILET TISSUE (ROLL) DISPENSER (PROVIDED BY OWNER*)
TA-7	SANITARY NAPKIN DISPOSAL (PROVIDED BY OWNER*)
TA-8	SOAP DISPENSOR (PROVIDED BY OWNER*)
TA-9	XLERATOR Hand Dryer
TA-10	SANITARY NAPKIN DISPENSOR (PROVIDED BY OWNER*)
TA-11	BABY CHANGING STATION

* OWNER PROVIDED TOILET ACCESSORIES ARE TO BE INSTALLED BY THE CONTRACTOR

BUNCOMBE COUNTY SPORTS PARK RESTROOM BUILDING

58 APAC DRIVE
ASHEVILLE, NC

Prepared For

BUNCOMBE COUNTY

58 APAC DRIVE, ASHEVILLE, NC

DOMOKUR | ARCHITECTS

4651 Medina Road
Akron, Ohio 44321-1315
p 330.666.7878

43 South Broad Street, Suite 201
Brevard, North Carolina 28712-3738
p 828.884.8478

www.domokur.com

MICHAEL G. DOMOKUR REGISTERED ARCHITECT N. CAROLINA RALEIGH, NC
PRELIMINARY
NOT FOR CONSTRUCTION
This document may not be reproduced in any manner without the express written authorization of Domokur Architects

Issue	Date	Description
1	11/17/2023	ISSUED FOR BID AND PERMIT

FLOOR PLAN AND ELEVATIONS

Project No: 2022090
Project Manager: MTT
Drawn By: Author

A100

11/17/2023 4:36:13 PM Autodesk Docs://230828 Buncombe RR/2310004 Buncombe RR_aaistudio.rvt

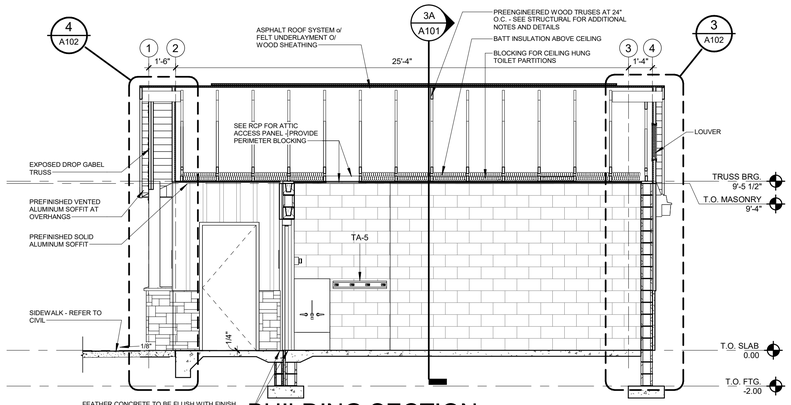

4 A101 BUILDING SECTION
SCALE: 1/4" = 1'-0"

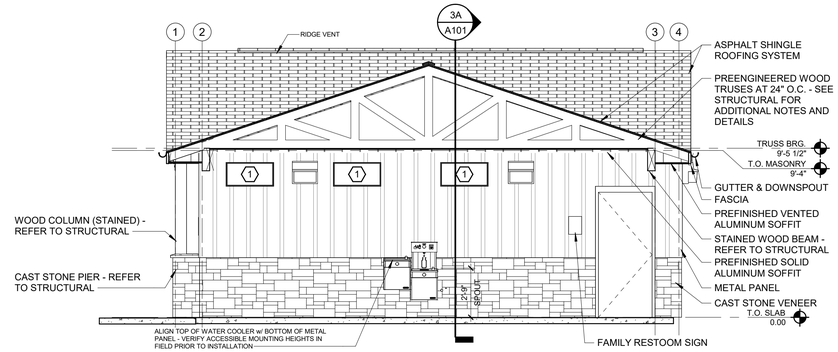

5 A101 BUILDING SECTION
SCALE: 1/4" = 1'-0"

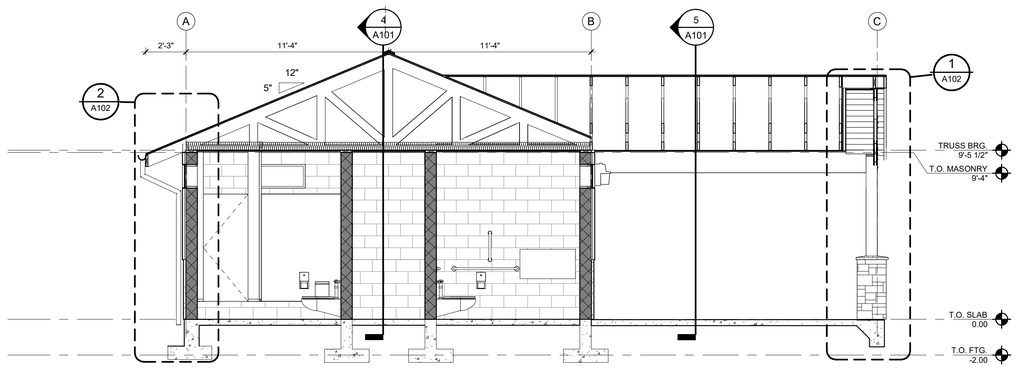

3A A101 BUILDING SECTION
SCALE: 1/4" = 1'-0"

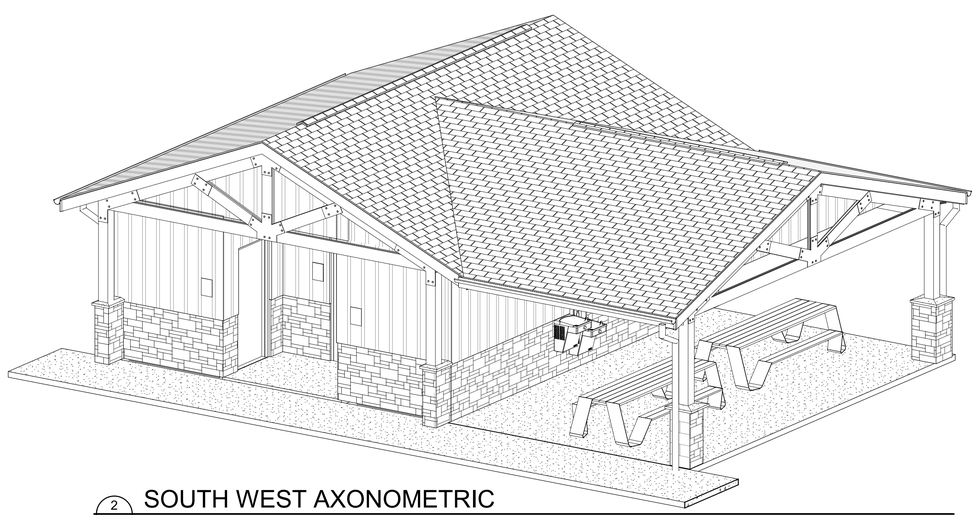

2 A101 SOUTH WEST AXONOMETRIC
SCALE:

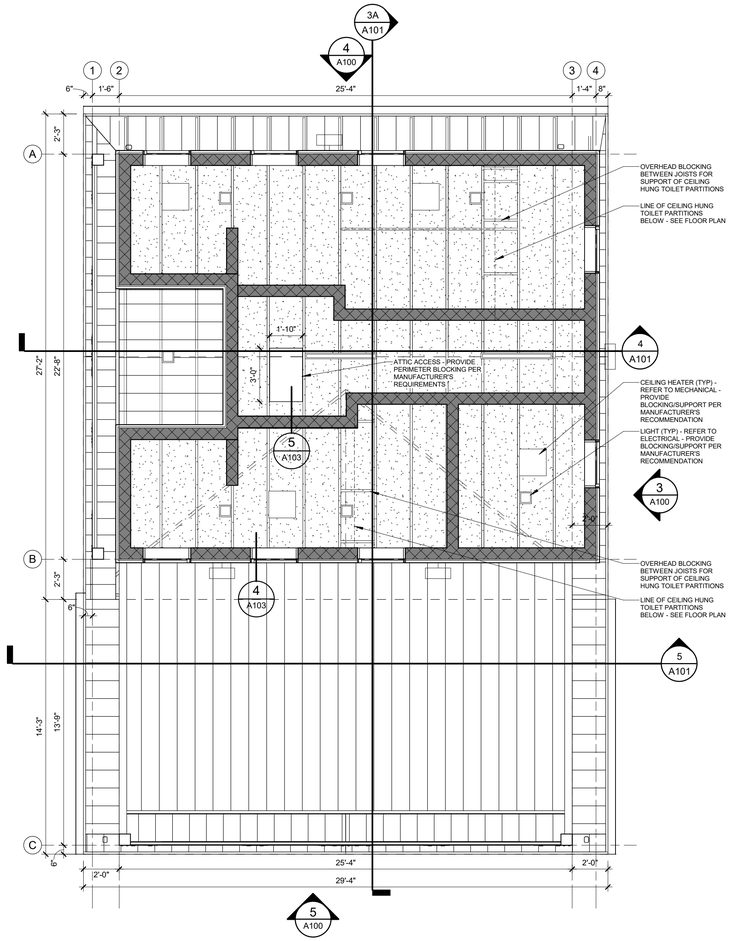

NORTH

1 A101 FIRST FLOOR REFLECTED CEILING PLAN
SCALE: 1/4" = 1'-0"

CEILING PLAN LEGEND

ELEMENTS IN THIS LEGEND REPRESENT NEW CONSTRUCTION. PROVIDE BLOCKING / SUPPORT FOR ALL FIXTURES AND DEVICES PER THE MANUFACTURER'S RECOMMENDATIONS. SEE MECHANICAL AND ELECTRICAL DRAWINGS AND SPECIFICATIONS FOR ACTUAL FIXTURES AND DEVICES.

- FINISHED CEMENT BOARD CEILING
- SURFACE MOUNTED LIGHT FIXTURE
- SURFACE MOUNTED LIGHT FIXTURE
- WALL PAC
- SURFACE MOUNTED HEATER

GENERAL NOTES

A. ACOUSTICAL CEILING GRIDS ARE CENTERED IN ROOMS IN BOTH DIRECTIONS UNLESS SPECIFICALLY DIMENSIONED OR NOTED OTHERWISE.

B. CENTER ALL FIXTURES IN CEILING TILES UNLESS NOTED OR DIMENSIONED OTHERWISE.

BUNCOMBE COUNTY SPORTS PARK
RESTROOM BUILDING

58 APAC DRIVE
ASHEVILLE, NC

Prepared For
BUNCOMBE COUNTY

58 APAC DRIVE, ASHEVILLE, NC

DOMOKUR | ARCHITECTS

4651 Medina Road
Akron, Ohio 44321-1315
p 330.666.7878

43 South Broad Street, Suite 201
Brevard, North Carolina 28712-3738
p 828.884.8478

www.domokur.com

MICHAEL G. DOMOKUR, REGISTERED ARCHITECT
PRELIMINARY
NOT FOR CONSTRUCTION
This document may not be reproduced in any manner without the express written authorization of Domokur Architects
NORTH CAROLINA
RALEIGH, NC

Issue	Date	Description
1	11/17/2023	ISSUED FOR BID AND PERMIT

BUILDING SECTIONS & RCP

Project No: 2022090
Project Manager: MTT
Drawn By: Author

A101

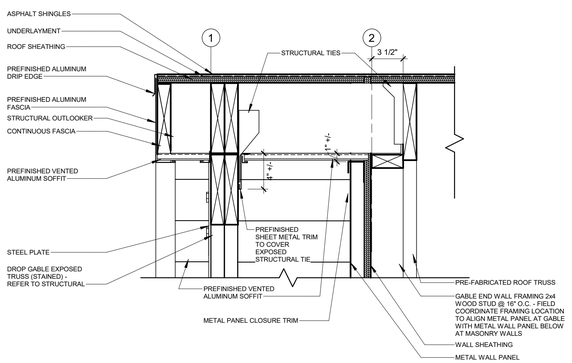

5 A102 DETAIL
SCALE: 1 1/2" = 1'-0"

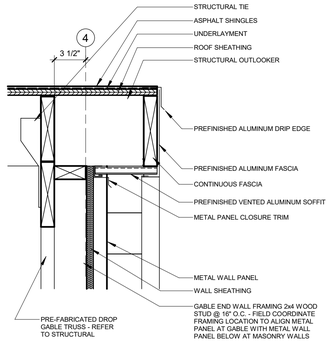

7 A102 DETAIL
SCALE: 1 1/2" = 1'-0"

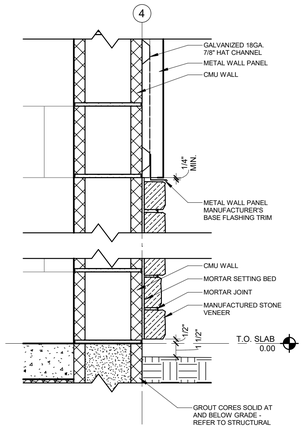

6 A102 DETAIL
SCALE: 1 1/2" = 1'-0"

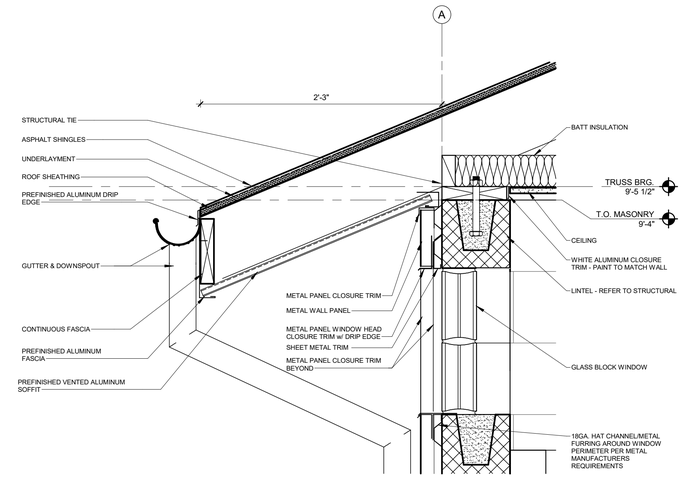

8 A102 DETAIL
SCALE: 1 1/2" = 1'-0"

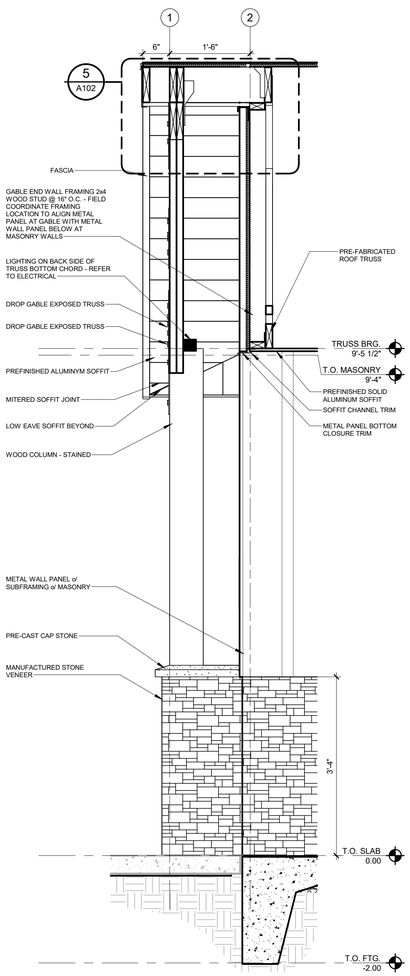

4 A102 WALL SECTION - WEST
SCALE: 3/4" = 1'-0"

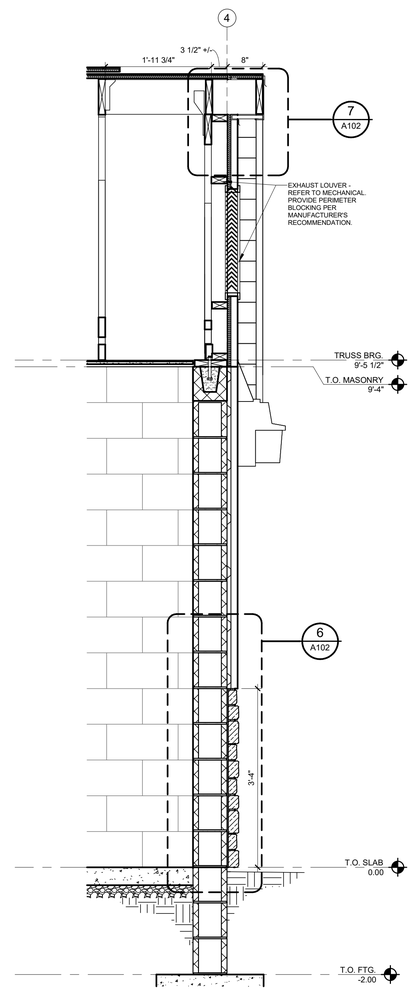

3 A102 WALL SECTION - EAST
SCALE: 3/4" = 1'-0"

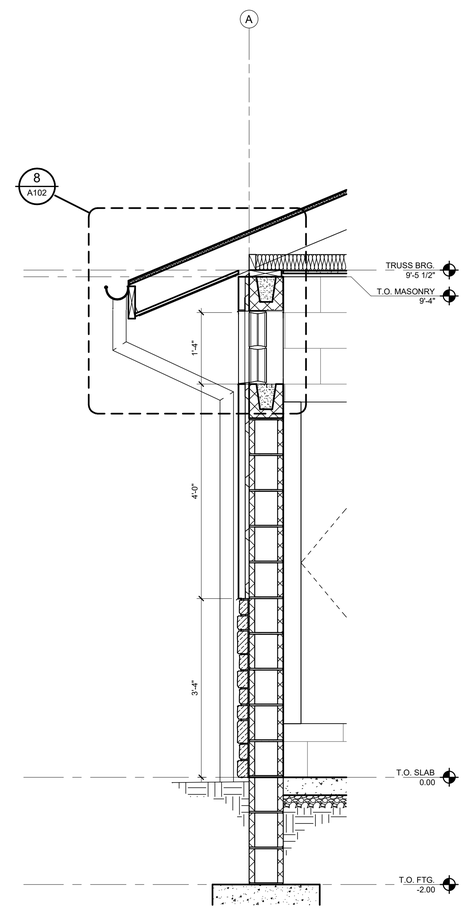

2 A102 WALL SECTION - NORTH
SCALE: 3/4" = 1'-0"

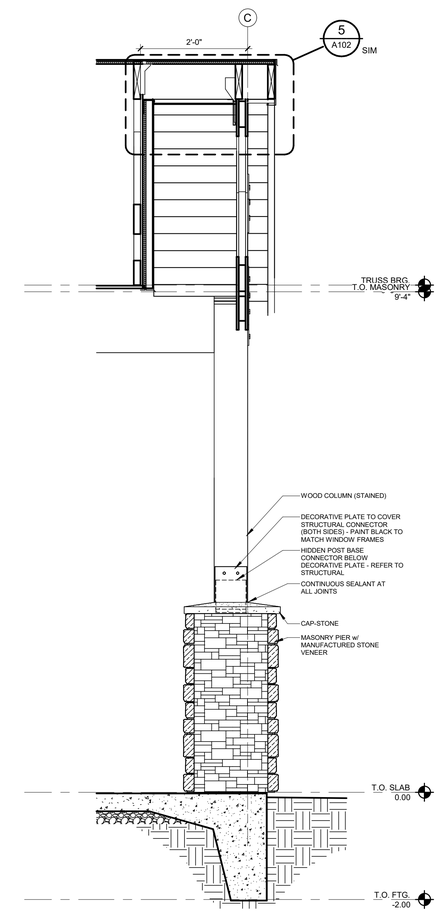

1 A102 WALL SECTION - SOUTH
SCALE: 3/4" = 1'-0"

BUNCOMBE COUNTY SPORTS PARK
RESTROOM BUILDING

58 APAC DRIVE
ASHEVILLE, NC

Prepared For
BUNCOMBE COUNTY

58 APAC DRIVE, ASHEVILLE,
NC

DOMOKUR | ARCHITECTS

4651 Medina Road
Akron, Ohio 44321-1315
p 330.666.7878

43 South Broad Street, Suite 201
Brevard, North Carolina 28712-3738
p 828.884.8478

www.domokur.com

MICHAEL G. DOMOKUR
REGISTERED ARCHITECT
NORTH CAROLINA
RALEIGH, NC

PRELIMINARY
NOT FOR CONSTRUCTION

Issue	Date	Description
1	11/17/2023	ISSUED FOR BID AND PERMIT

WALL SECTIONS AND DETAILS

Project No: 2022090
Project Manager: MTT
Drawn By: Author

A102

DOOR & FRAME SCHEDULE

DOOR									FRAME							
				SIZE					DETAIL							
DOOR NO.	ROOM NAME	ROOM NO.	TYPE	WD	HT	THK	MAT'L	GLAZ.	HEAD	JAMB	SILL	MAT'L	TYPE	FIRE LABEL	HDW	NOTE
101	WOMEN	101	A	3'-0"	7'-0"	1 3/4"	HM	--	2	3	1	HM	HM-1	-	1	COORDINATE MASTERKEYING WITH OWNER
102	MEN	102	A	3'-0"	7'-0"	1 3/4"	HM	--	2	3	1	HM	HM-1	-	1	COORDINATE MASTERKEYING WITH OWNER
103	FAMILY RR	103	A	3'-0"	7'-0"	1 3/4"	HM	--	2	3	1	HM	HM-2	-	1	COORDINATE MASTERKEYING WITH OWNER
104	SERVICE	104	A	3'-0"	7'-0"	1 3/4"	HM	--	2	3	1	HM	HM-2	-	1	COORDINATE MASTERKEYING WITH OWNER

WALL / WOOD FINISHES

P-1 PAINT
MANF.: SHERWIN WILLIAMS
COLOR:
SHEEN:

ST-1 STAIN
MANF.: SHERWIN WILLIAMS
COLOR:
SHEEN:

WALL PROTECTION

CG-1 PLASTIC CORNER GUARD
MANF.:
PRODUCT:
COLOR:
SIZE:

FLOOR FINISHES

SC-1 SEALED CONCRETE

BC-1 BRUSHED CONCRETE

BASE FINISHES

B-1 RUBBER COVE BASE
MANF.:
COLOR:
SIZE:

TRANSITIONS

TS-1 TRANSITION STRIP
MANF.:
STYLE:
COLOR:

CEILING

CLG-1 CEMENT BOARD
MANF.:
STYLE:
COLOR:
SIZE:
GRID:

GENERAL NOTES

A. REFER TO SPECIFICATIONS FOR PRODUCT INFORMATION.

B. INSTALL FLOORING TRANSITION STRIPS AS REQUIRED AT CHANGE OF MATERIAL. COLORS TO BE SELECTED BY ARCHITECT FROM MANUFACTURER'S FULL RANGE.

C. PAINT ALL NEW AND EXISTING HOLLOW METAL DOORS IN PROJECT AREA P-?

D. PAINT ALL NEW AND EXISTING HOLLOW METAL DOOR FRAMES IN PROJECT AREA P-?

E. PAINT UNDERSIDE OF ALL SOFFITS AND GYP. BD. CEILING P-? UNLESS NOTED OTHERWISE.

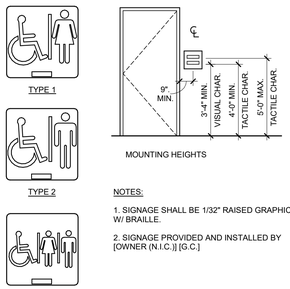

NOTES:

1. SIGNAGE SHALL BE 1/32" RAISED GRAPHIC W/ BRAILLE.

2. SIGNAGE PROVIDED AND INSTALLED BY [OWNER (N.I.C.)] [G.C.]

SIGN MOUNTING DETAILS

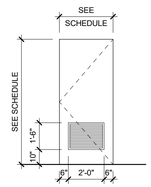

A DOOR TYPES

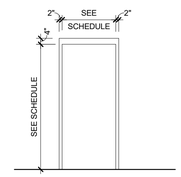

A FRAME TYPES

ROOM FINISH SCHEDULE

ROOM NAME	ROOM NUMBER	WALL	BASE	FLOOR	CEILING	REMARKS
WOMEN	101	PT-1	-	SC-1	CLG-1	
MEN	102	PT-1	-	SC-1	CLG-1	
FAMILY RR	103	PT-1	-	SC-1	CLG-1	
SERVICE	104	PT-1	-	SC-1	CLG-1	

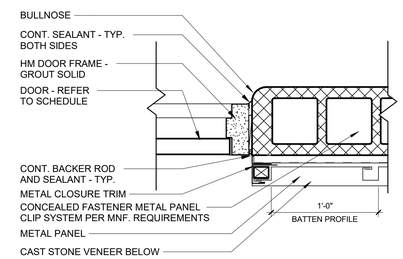

3 A103 HM DOOR JAMB
SCALE: 1 1/2" = 1'-0"

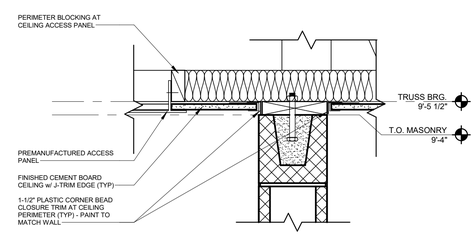

5 A103 TOP OF INT. WALL (TYP.)
SCALE: 1 1/2" = 1'-0"

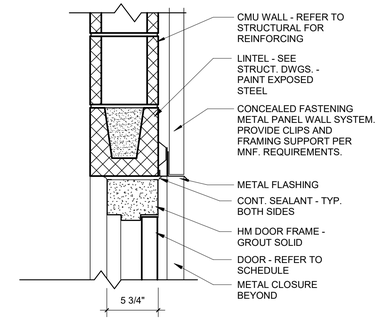

2 A103 HM DOOR HEAD
SCALE: 1 1/2" = 1'-0"

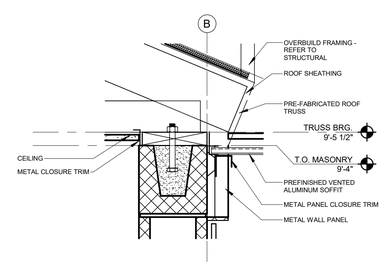

4 A103 SOFFIT DETAIL
SCALE: 1 1/2" = 1'-0"

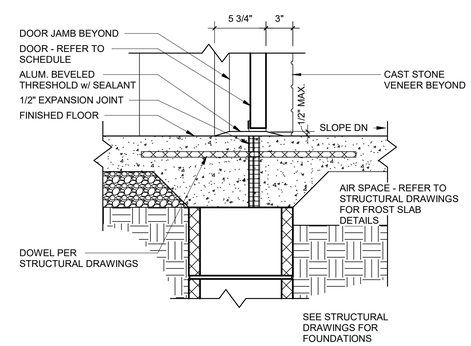

1 A103 HM DOOR SILL
SCALE: 1 1/2" = 1'-0"

BUNCOMBE COUNTY SPORTS PARK
RESTROOM BUILDING

58 APAC DRIVE
ASHEVILLE, NC

Prepared For
BUNCOMBE COUNTY

58 APAC DRIVE, ASHEVILLE, NC

DOMOKUR | ARCHITECTS

4651 Medina Road
Akron, Ohio 44321-1315
p 330.666.7878

43 South Broad Street, Suite 201
Brevard, North Carolina 28712-3738
p 828.884.8478

www.domokur.com

MICHAEL G. DOMOKUR
REGISTERED ARCHITECT
NORTH CAROLINA
RALEIGH, NC

PRELIMINARY
NOT FOR CONSTRUCTION
This document may not be reproduced in any manner without the express written authorization of Domokur Architects

Issue	Date	Description
1	11/17/2023	ISSUED FOR BID AND PERMIT

SCHEDULES AND DETAILS

Project No: 2022090
Project Manager: MTT
Drawn By: Author

A103

PLUMBING LEGEND

Cold Water Piping Below Grade	
Cold Water (CW)	
Sanitary Waste Piping	
Vent Piping	
Vent Thru Roof (VTR)	
Floor Cleanout (FCO)	
Grade Cleanout (GCO)	
Pipe Drop	
Water Service Riser	
Ball Valve	
Water Hammer Arrestor (WHA)	
Hose Bibb (HB)	
Wall Hydrant (WH)	

PLUMBING EQUIPMENT SCHEDULE

TAG	EQUIPMENT
FCO	Floor cleanout: Zurn model ZN-1400 or equal. Dura-coated cast iron, polished nickel bronze top, bronze plug.
GCO	Ground cleanout: Zurn Z-1440-BP or equal. Dura-coated cast iron body with bronze plug. Set in 12"x12"x4" concrete pad flush with grade. See detail.
HB	Hose bibb: Woodford model 24 or equal. Lockable, anti-syphon, metal wheel handle, chrome finish. Provide key.
PRV	Pressure Reducing Valve: Watts Model LF25AUB-Z3 or equal. Lead free, copper silicon alloy body, replaceable polymer seat (1/2"-1"), replaceable stainless steel seat (1¼" 2"), stainless steel strainer, reinforced EPDM with PTFE wetted surface diaphragm and EPDM valve disc. (1/2"-10gpm) (3/4"-14gpm) (1"-20gpm) (1¼"-25gpm) (1½"-32gpm) (2"-45gpm) (flows are at 15psi drop)
WHA	Water Hammer Arrestor. J.R. Smith Hydrotrol 5000 Series or equal. All stainless steel construction shock absorbers shall be installed at all solenoid, remote operated or quick closing valves and at each plumbing fixture or battery of plumbing fixtures. Install on both hot and cold water branch lines in an upright position as close as possible to the valve or valves being served. Size per manufacturer's recommendations and PDI.
WH	Non freeze wall Hydrant: Woodford model B-65 or equal. Automatic draining, anti-syphon vacuum breaker, chrome finished. Provide with extra key for every 5 wall hydrants.

PLUMBING FIXTURE SCHEDULE

TAG	Fixture	Fixture manufacturer (or equal)	Fixture model #	Trim manufacturer (or equal)	Trim model #	Sanitary	Vent	Cold water	Hot water	Remarks
P1	Wall mounted water closet. Sensor flush valve. HC accessible.	Kohler	Kingston Ultra K-84325-0	Zurn	ZEMS600AV-IS	3"	2"	1"	-	White vitreous china siphon jet assembly. White open front seat with check hinges and elongated bowl. ADA compliant, hardwired, sensor activated, metering flush valve. Provide chair carrier with floor mount. Confirm carrier dimensions are acceptable before ordering or beginning work. Install per ADA. Provide Zurn Z1202-H4 carrier and 12" all-thread bolts.
P2	Wall mounted water closet. Sensor flush valve.	Kohler	Kingston Ultra K-84325-0	Zurn	ZEMS600AV-IS	3"	2"	1"	-	White vitreous china siphon jet assembly. White open front seat with check hinges and elongated bowl. Hardwired, sensor activated, flushometer. Provide chair carrier with floor mount. Confirm carrier dimensions are acceptable before ordering or beginning work. Provide Zurn Z1202-H4 carrier and 12" all-thread bolts.
P3	Urinal. Wall hung sensor flush valve. HC accessible.	Kohler	Bardon K-4991-ET	Zurn	ZEMS600AV-IS	2"	2"	3/4"	-	White vitreous china, wall-mounted, washout assembly with flushing rim and extended sides. ADA compliant, hardwired, sensor activated, chrom plated flushometer. Install per ADA. Provide Zurn Z1222 carrier and 12" all-thread bolts.
P4	Lavatory. Wall mounted. HC accessible.	Kohler	Hudson K-2867-0	Zurn	Z6913-XL	1-1/2"	1-1/2"	1/2"	-	White, wall-mounted, white vitreous china, concealed arm carrier, 4" faucet centers. ADA compliant, chrome plated brass faucet with 0.5 gpm aerator, battery powered sensor. Provide hardwired power converter (-HW6). Provide white lav-guard trap & supply cover. Install per ADA. Provide Zurn Z-1231 carrier.
P5	Vandal resistant, bi-level Electric water cooler with bottle filler. HC accessible.	Elkay	LVRCTL8WSK	-	-	1-1/2"	1-1/2"	1/2"	-	Vandal resistant, frost resistant wall mount bi-level ADA cooler with bottle filler, electronic bottle filler sensor with mechanical front and side Flexi-guard safety bubbler push button, 8 gph, non-filtered. Install per ADA requirements. 98324C - Accessory - Cane Apron for EMABF
P6	Mop sink, terrazo, 24" x 24" x 12"	Fiat	TSB100	Fiat	830AA	3"	2"	1/2"	-	Chrome plated faucet with vacuum breaker, wall brace, pail hook. Provide SS splash panels, mop hangar, hose and hose bracket.

PLUMBING SPECIFICATIONS

1. **Shop Drawings:** Provide product data for all equipment and materials. Include pertinent dimensions, materials of construction, performance characteristics, weights and factory and field wiring diagrams.
2. **Operation and Maintenance Manuals:** Provide 3 bound O&M Manuals at the completion of the project. Include approved shop drawings and manufacturer's maintenance manuals.
3. **Record Drawings:** Contractor shall maintain a set of drawings on the job site to record all differences between the project documents and "As-Built". Contractor shall provide a set of "As-Built" drawings to the Owner at the completion of the project.
4. **Warranty:** Contractor shall warranty the installation against defects for a period of one year from the date of Owner acceptance. Any defective materials or workmanship shall be replaced at no cost to the Owner.
5. **Permits and Fees:** Contractor shall obtain and pay for all permits, fees and inspections required under his portion of the work.
5. **Electrical Coordination:** The plumbing contractor shall be responsible for providing disconnect switches for plumbing equipment not provided with factory mounted disconnect switches and the wiring from plumbing equipment to the disconect switch. All wiring and devices shall be in accordance with the NEC and electrical specifications. The electrical contractor shall be responsible for wiring and all devices upstream of disconnect device.
6. **General Duty Valves:** Valve pressure and temperature ratings shall be not less than indicated and as required for system pressures and temperatures. Valve shall be the same as upstream piping unless otherwise indicated. Valves in insulated piping shall have 2-inch stem extensions on gate valves with rising stem. Ball valves shall be provided with extended operating handle of non-thermal-conductive material, and protective sleeve that allows operation of valve without breaking the vapor seal or disturbing insulation. Brass or bronze ball valves shall be two-piece, full-port, brass trim, MSS SP-110, 150 psig SWP, 600 psig CWP, two piece body, forged brass, threaded or solder ends, PTFE or PTE seats, and chrome plated ball. Bronze gate valves shall be Class 125, MSS SP-80, Type 1, non-rising stem or Type 2, rising stem, with a 200psig CWP, ASTM B 62 bronze body with integral seat, solid wedge bronze disc, asbestos free packing and threaded or solder joint ends. Bronze globe valves shall be Class 125, MSS SP-80, Type 1 with a 200psig CWP, ASTM B 62 bronze body with integral seat, asbestos free packing and threaded solder joint ends.
7. **Piping Insulation:** Flexible elastomeric insulation shall be closed-cell, sponge- or expanded-rubber materials complying with ASTM C 534, Type I for tubular materials. Mineral-fiber, preformed pipe insulation shall be Type I, 850 Deg F, mineral or glass fibers bonded with a thermosetting resin, complying with ASTM C 547, Type I, Grade A, with factory-applied ASJ or with factory-applied ASJ-SS. Install insulation continuously through non-fire rated walls and partitions. Install insulation continuously through penetrations of fire-rated walls and partitions and seal in accordance with a UL approved through penetration firestop system. Domestic cold, hot and recirculated hot water insulation shall be 1-inch thick. Insulate exposed piping including drain and water supplies under handicapped lavatories and sinks, to meet the requirements of ADA 4.19.4, ADAAG 606.5, ICC/ANSI A117.1 606.6, or GSA & DOD's ABA 606.5.requirement to "protect against contact - no sharp or abrasive surfaces"
8. **Pipe Hangers and Supports:** Carbon-steel pipe hangers and supports shall be MSS SP-58, Types 1 through 58, factory-fabricated components. Galvanized metallic coatings may be pregalvanized or hot dipped. Hanger rods shall be continuous-thread rod, nuts, and washer made of carbon steel. Copper pipe hangers shall be MSS SP-58, Types 1 through 58, copper-coated-steel, factory-fabricated components. Hanger rods shall be continuous-thread rod, nuts, and washer made of carbon steel. Trapeze pipe hangers shall be MSS SP-69, Type 59, shop- or field-fabricated pipe-support assembly made from structural carbon-steel shapes with MSS SP-58 carbon-steel hanger rods, nuts, saddles, and U-bolts. Thermal-hanger shield inserts for shall be heavy duty with minimum 100psig compressive strength. For trapeze or clamped systems insert and shield shall cover entire circumference of pipe. For clevis or band hanger insert and shield shall cover lower 180 degrees of pipe. Pipe positioning systems shall be IAPMO PS 42, positioning system of metal brackets, clips, and straps for positioning piping in pipe spaces; for plumbing fixtures in commercial applications. Supports for piping installed above a roof shall be B-Line BD Series with 14 gauge galvanized channel and recycled rubber base.
9. **Domestic Water Piping (Metallic):** Hard copper tube shall be ASTM B 88, Type L water tube, drawn temper. Soft copper tube shall be ASTM B 88, Type K water tube, annealed temper. Fittings shall be cast-copper, solder-joint fittings, ASME B16.18, pressure fittings or wrought-copper, solder-joint fittings, ASME B16.22 pressure fittings. Bronze flanges shall be ASME B16.24, Class 150, with solder-joint ends. Copper unions shall be MSS SP-123 cast-copper-alloy, hexagonal-stock body with ball-and-socket, metal-to-metal seating surfaces and solder-joint or threaded ends. Above grade water piping shall be Type L hard copper. Below grade piping shall be Type K soft copper. Piping shall be tested for leaks in accordance with Chapter 312 of the 2018 NC Plumbing Code. Domestic water piping shall be sanitized in accordance with Chapter 610 of the 2018 NC Plumbing Code.
10. **Water Pressure Reducing Valves:** Water regulators shall meet the requirements of ASSE 1003 with a pressure rating of 150 psig an outlet pressure setting of 60 psig, bronze body and threaded end connections. Provide pressure gauge with gauge cock in valve discharge piping.
11. **Water-Hammer Arresters:** ASSE 1010 or PDI-WH 201, metal bellows type, sizes AA and A through F.
12. **Sanitary Waste and Vent Piping:** PVC pipe and fittings shall be solid-Wall PVC Pipe, ASTM D 2665. PVC socket fittings shall be ASTM D 2665, made to ASTM D 3311, drain, waste, and vent patterns and to fit Schedule 40 pipe. Waste and vent piping shall be pressure tested in accordance with the requirements of the 2018 NC Plumbing Code.
13. **Below Grade Sanitary Waste, Grease Waste, Storm and Vent Piping:** Hub and Spigot Cast Iron pipe and fittings shall be manufactured from gray cast iron and shall conform to ASTM A 74. All pipe and fittings shall be marked with the collective trademark of the Cast Iron Soil Pipe Institute ® and listed by NSF® International. Pipe and fittings shall be service (SV) weight. Joints shall be made using a compression gasket manufactured from an elastomer meeting the requirements of ASTM C 564. All pipe and fittings to be produced by a single manufacturer and are to be installed in accordance with manufacturer's recommendations and applicable code requirements. Waste, storm and vent piping shall be pressure tested in accordance with the requirements of the 2018 NC Plumbing Code.
14. **Plumbing Fixtures:** See Plumbing Fixture Schedule.
15. **Installation:** Materials, fixtures, equipment, accessories and installation shall comply with the requirements of the 2018 NC Plumbing Code, 2018 NC Energy Code, applicable sections of the 2018 NC Building Code and local ordinances. Equipment and materials shall be installed in compliance with manufacturer's installation recommendations and acceptable industry standards. All pipe shall be substantially supported to prevent sags. Piping shall be run parallel to walls and structure unless indicated otherwise. All water piping and other piping subject to freezing shall be run within the thermal envelope of the building unless noted otherwise. Piping subject to freezing that is noted to be install outside of the thermal envelope shall be heat traced with self limiting heat tape and insulated per the insulation specification. It is the responsibility of the contractor to field verify existing conditions and dimensions prior to beginning work.

FINAL DRAWING

11-17-2023

TILDENWHITE
& ASSOCIATES, PLLC
15 W. Walnut St #202, Asheville, NC 28801
828-255-4327 Project: 22105

BUNCOMBE COUNTY SPORTS PARK
RESTROOM BUILDING

58 APAC DRIVE
ASHVILLE, NC

Prepared For
BUNCOMBE COUNTY

DOMOKUR | ARCHITECTS

4651 Medina Road
Akron, Ohio 44321-1315
p 330.666.7878

43 South Broad Street, Suite 201
Brevard, North Carolina 28712-3738
p 828.884.8478
www.domokur.com

Issue	Date	Description

PLUMBING
NOTES & SCHEDULES

Project No:
Project Manager:
Drawn By: TWA

P1

KEYED NOTES:

1. COORDINATE MOP SINK LOCATION WITH LAVATORY FLOOR MOUNTED CARRIER. RELOCATE MOP SINK AS REQUIRED TO FIT NEXT TO CARRIERS. SEE DETAIL 11/P3.
2. COORDINATE WITH ELECTRICAL CONTRACTOR FOR PANEL LOCATION AND LAVATORY FLOOR MOUNTED CARRIER DIMENSIONS. RELOCATE PANEL AS REQUIRED TO FIT WITH FIXTURE CARRIERS. SEE DETAIL 11/P3.
3. CONFIRM LAVATORY CARRIER DIMENSIONS WILL HAVE THE REQUIRED SPACE BEFORE BEGINNING WORK. SEE DETAIL 11/P3.
4. HOSE BIBB LOCATED UNDERNEATH LAVATORY TO ALLOW FOR WINTERIZATION OF PLUMBING SUPPLY SYSTEM.
5. CONFIRM LAVATORY CARRIER DIMENSIONS WILL HAVE THE REQUIRED SPACE BEFORE BEGINNING WORK. SEE DETAIL 9/P3.

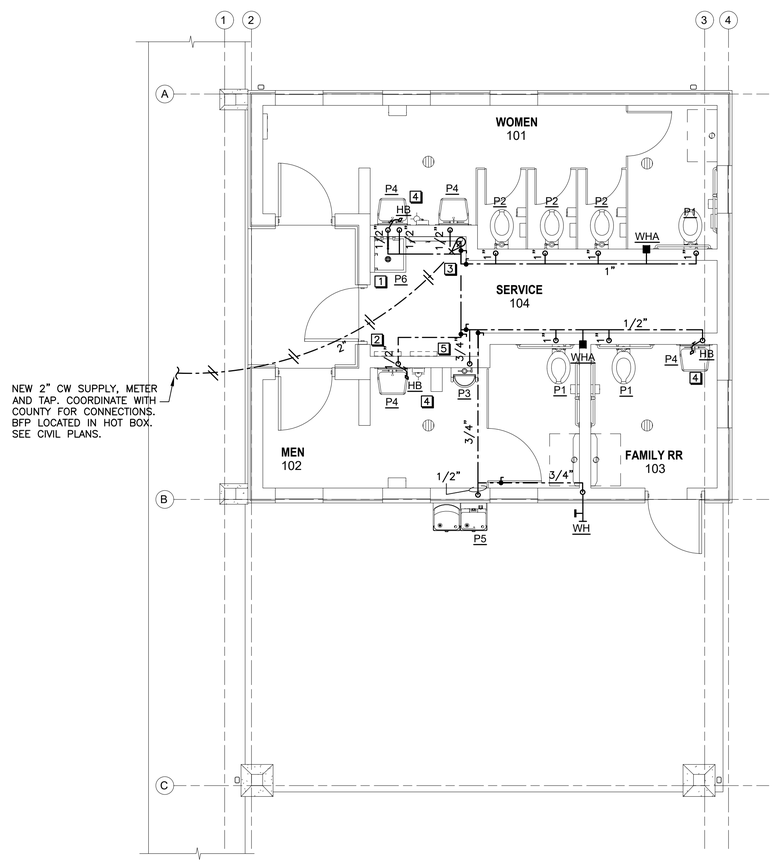

1 / P2 PLUMBING SUPPLY PIPING PLAN
SCALE: 1/4" = 1'-0"

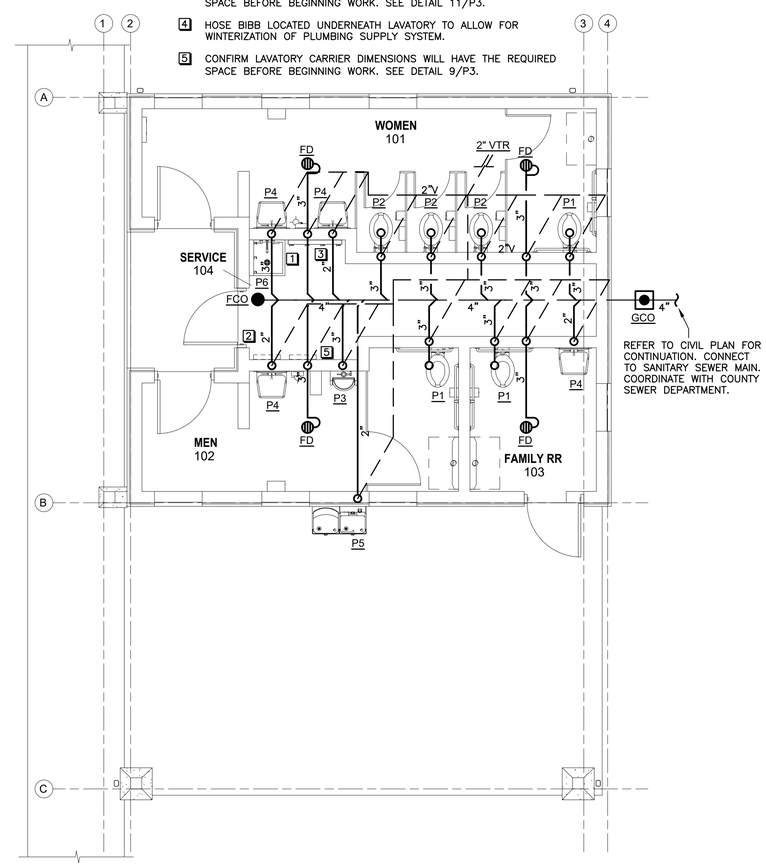

1 / P2 PLUMBING SANITARY PIPING PLAN
SCALE: 1/4" = 1'-0"

FINAL DRAWING

NORTH CAROLINA PROFESSIONAL SEAL 028953 ENGINEER TILDEN A. WHITE
FOR REVIEW PURPOSES ONLY

11-17-2023

TILDENWHITE & ASSOCIATES, PLLC
15 W. Walnut St #202, Asheville, NC 28801
828-255-4327 Project: 22105

BUNCOMBE COUNTY SPORTS PARK
RESTROOM BUILDING

58 APAC DRIVE
ASHVILLE, NC

Prepared For
BUNCOMBE COUNTY

DOMOKUR | ARCHITECTS

4651 Medina Road
Akron, Ohio 44321-1315
p 330.666.7878

43 South Broad Street, Suite 201
Brevard, North Carolina 28712-3738
p 828.884.8478
www.domokur.com

Issue	Date	Description

PLUMBING PLAN

NORTH

Project No:
Project Manager:
Drawn By: TWA

P2

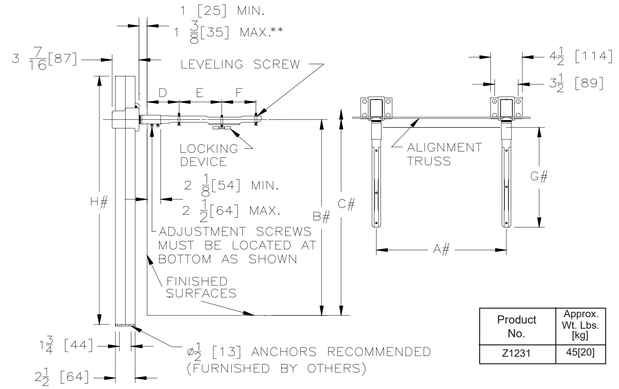

Product No.	Approx. Wt. Lbs. [kg]
Z1231	45[20]

NOTES:
REFER TO ROUGH-IN GUIDE OF SPECIFIC FIXTURE FOR DIMENSION
** WITH STANDARD SLEEVE LENGTH OF 4 [102]

11 / P3 ZURN Z1231 CARRIER DIMENSIONS
SCALE: NONE

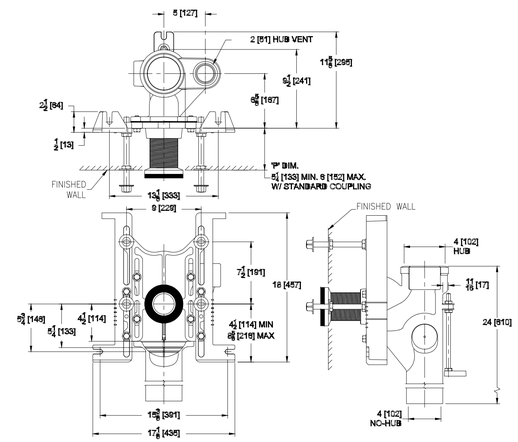

Product Number	Approx. Wt. lbs [kg]
Z1202-H4	79 [36]

Note:
1. Z coupling, Min. 'P' Dim. Obtainable=2 [51] EZ-SetTM Coupling, Min. 'P' Dim. Obtainable=4-1/4 [108] or 2-1/16 [52] for 12 [305] NPT
2. Feet bolted to floor using min. 1/2 [13] dia.anchors.
3. Rear anchor foot required for secure installation.
4. 2 [51] Hub & Spigot vent connection regularly furnished on right hand side. Left hand available when specified (Suffix -VL)
5. Auxiliary inlet available right (-JR) or left (-JL) or both sides (-JJ) when specified.

10 / P3 ZURN Z1202-H4 CARRIER DIMENSIONS
SCALE: NONE

Dimensional Data (inches and [mm]) are Subject to Manufacturing Tolerances and Change Without Notice

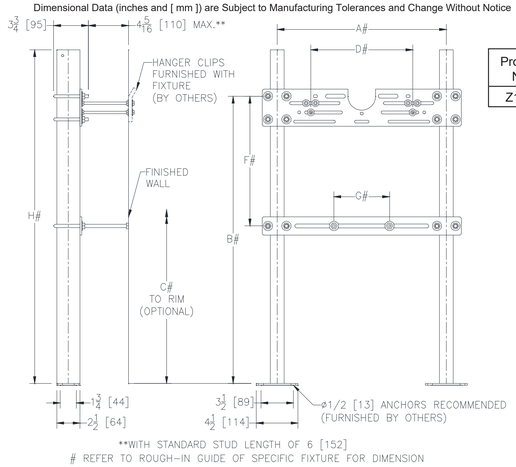

Product No.	Approx. Wt. Lbs. [kg]
Z1222	30[14]

**WITH STANDARD STUD LENGTH OF 6 [152]
REFER TO ROUGH-IN GUIDE OF SPECIFIC FIXTURE FOR DIMENSION

9 / P3 ZURN Z1222 CARRIER DIMENSIONS
SCALE: NONE

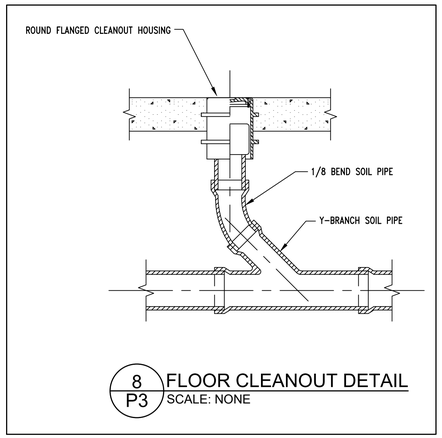

8 / P3 FLOOR CLEANOUT DETAIL
SCALE: NONE

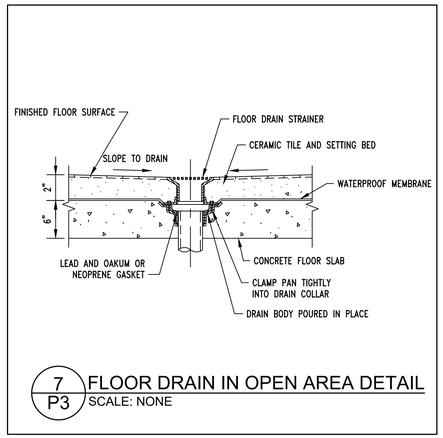

7 / P3 FLOOR DRAIN IN OPEN AREA DETAIL
SCALE: NONE

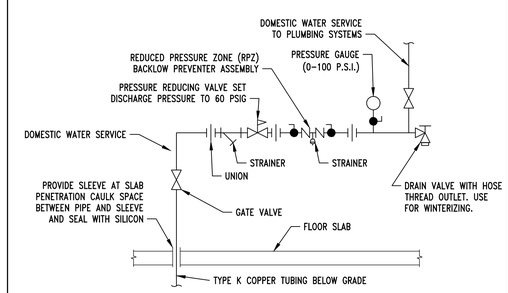

6 / P3 WATER SERVICE RISER DETAIL
SCALE: NONE

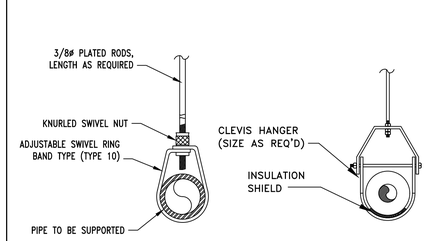

3 / P3 PIPE SUPPORT DETAIL
SCALE: NONE

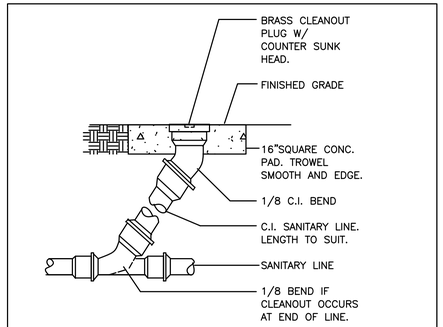

2 / P3 GROUND (GRADE) CLEANOUT DETAIL
SCALE: NONE

FINAL DRAWING
NORTH CAROLINA PROFESSIONAL SEAL 028953 ENGINEER TILDEN A. WHITE
FOR REVIEW PURPOSES ONLY
11-17-2023

TILDENWHITE & ASSOCIATES, PLLC
15 W. Walnut St #202, Asheville, NC 28801
828-255-4327 Project: 22105

BUNCOMBE COUNTY SPORTS PARK
RESTROOM BUILDING

58 APAC DRIVE
ASHVILLE, NC

Prepared For
BUNCOMBE COUNTY

DOMOKUR | ARCHITECTS

4651 Medina Road
Akron, Ohio 44321-1315
p 330.666.7878

43 South Broad Street, Suite 201
Brevard, North Carolina 28712-3738
p 828.884.8478
www.domokur.com

Issue	Date	Description

PLUMBING DETAILS

Project No:
Project Manager:
Drawn By: TWA

P3

EXHAUST FAN SCHEDULE

tag	EF-1	
serves	Restrooms, Chase	
manufacturer (or equal)	Greenheck	
model	CSP-A700	
type	in-line	
drive	direct	
rpm	1450	
airflow (low /high cfm)	350 / 650	
esp (inches H2O)	0.8	
max. sones	4	
control	programmable timer and 2-speed fan controls	
voltage	120V/1Ø	
power (watts)	352	
weight (lbs)	34	
dimensions	14.5 H x 14.5 W	
applicable notes	1,2,3	
1. Provide unit mounted disconnect and backdraft damper.		
2. Provide vibration isolation supports and duct connection. Flexible duct shall not exceed 10'.		
3. Provide programmable timer and two speed operation. Low speed shall be balanced to 350 cfm or higher (see plans). High speed doesn't require balancing, but is 100% power for use during cooling season.		

WALL/CEILING HEATER SCHEDULE

tag	WH-1	CH-1	CH-2
manufacturer (or equal)	Markel	Markel	Markel
model	E3055T2DWB	G3386D-RP	F3387D-RP
orientation	wall mounted	ceiling mounted	ceiling mounted
watts	1500	3000	4800
btu's	5120	10200	16382
voltage	120V/1Ø	208V/1Ø	208V/1Ø
amps	12.5	10.8	23.1
weight (lbs)	6	25	25
applicable notes	1,2,3,4,5	1,2,4,6	1,2,4,6
1. Provide with disconnect switch.			
2. Coordinate color with owner.			
3. Mount 12" AFF.			
4. Provide tamper resistant thermostat.			
5. Provide surface mounting kit as required.			
6. Mount flush with ceiling. Coordinate with G.C. for framing requirements.			

MECHANICAL LEGEND

Supply Diffuser (Type X, YYY CFM)	
Return Grille (Type X)	
Rectangular Duct X" Wide, Y" Deep (Inside Clear Dimension)	XxY
Round duct X" Diameter (Inside Clear Dimension)	X"ø
Duct Transition: Rectangular To Rectangular	XxY XXxYY
Duct Branch Tap: Round Spin-In Damper	XxY
Connect to Existing System	
Thermostat - Mount 48" AFF	T
Fire Damper - FD	

LOUVER SCHEDULE

TAG	L-1
manufacturer (or equal)	Ruskin
model	EME745
type	exhaust discharge
flow (cfm)	650
dimensions	24"W x 24"H
applicable notes	1,2,3
1. Finish to be powder coat black.	
2. Provide bird screen.	
3. Install in exterior wall.	

AIR DEVICE SCHEDULE

TAG	E1	E2	
manufacturer (or equal)	Price	Price	
model	91	91	
type	exhaust grille	exhaust grille	
size	10"x10"	12"x12"	
neck	varies	varies	
airflow (cfm)	50	300	
throw	na	na	
pressure drop inches w.c.	0.05	0.05	
NC	20	20	
applicable notes	1	1	
1. Coordinate finish with architect.			

MECHANICAL SPECIFICATIONS

1. **Shop Drawings:** Provide product data for all equipment and materials for approval prior to purchasing. Include pertinent dimensions, materials of construction, performance characteristics, weights and factory and field wiring diagrams for approval prior to ordering.
2. **Operation and Maintenance Manuals:** Provide 3 bound O&M Manuals at the completion of the project. Include approved shop drawings and manufacturer's maintenance manuals.
3. **Record Drawings:** Contractor shall maintain a set of drawings on the job site to record all differences between the project documents and "As-Built". Contractor shall provide a set of "As-Built" drawings to the Owner at the completion of the project.
4. **Warranty:** Contractor shall warranty the installation against defects for a period of one year from the date of Owner acceptance. Any defective materials or workmanship shall be replaced at no cost to the Owner.
5. **Electrical Coordination:** The mechanical contractor shall be responsible for providing disconnect switches for mechanical equipment not provided with factory mounted disconnect switches and the wiring from mechanical equipment to the disconect switch. All wiring and devices shall be in accordance with the NEC and electrical specifications.
6. **Firestopping:** Contractor shall firestop all pipe penetrations and duct penetrations not requiring fire dampers of fire rated walls with a UL approved firestop system. Installation shall strictly follow the firestop system details.
7. **Permits and Fees:** Contractor shall obtain and pay for all permits, fees and inspections required under his portion of the work.
8. **Common Motor Requirements:** Motors shall comply with NEMA MG 1 unless otherwise indicated. Polyphase motors shall be NEMA MG 1, Design B, medium induction motor, energy efficient, as defined in NEMA MG 1, with a service factor of 1.15. Bearings shall be regreasable, shielded, antifriction ball bearings suitable for radial and thrust loading. Motor enclosure shall be cast iron for motor frame sizes 324T and larger; rolled steel for motor frame sizes smaller than 324T. Single phase motors larger than 1/20 hp shall be one of the following, to suit starting torque and requirements of specific motor application, permanent-split capacitor, split phase capacitor start, inductor run or capacitor start, capacitor run. Multispeed motors shall be variable-torque, permanent-split-capacitor type. Bearings shall be prelubricated, antifriction ball bearings or sleeve bearings suitable for radial and thrust loading. Thermal Protection: Internal protection to automatically open power supply circuit to motor when winding temperature exceeds a safe value calibrated to temperature rating of motor insulation. Thermal-protection device shall automatically reset when motor temperature returns to normal range. Motors 1/3hp and smaller shall be 115v/1ph, motors 1/2hp and larger shall be 208-230v/3ph unless noted otherwise.
9. **Testing and Balancing:** Perform testing and balancing procedures on each system according to the procedures contained in AABC's "National Standards for Total System Balance", ASHRAE 111, NEBB's "Procedural Standards for Testing, Adjusting, and Balancing of Environmental Systems" or SMACNA's "HVAC Systems - Testing, Adjusting, and Balancing" and in this Section. Prepare test reports for both fans and outlets. Prepare a certified written report; tabulate and divide the report into separate sections for tested systems and balanced systems. Include a certification sheet at the front of the report's binder, signed and sealed by the certified testing and balancing engineer. Include a list of instruments used for procedures, along with proof of calibration. The final report shall contain the following in addition to certified field-report data, fan curves, manufacturers' test data and field test reports prepared by system and equipment installers, other information relative to equipment performance; do not include Shop Drawings and product data. In addition to form titles and entries, include the following data title page, name and address of the TAB contractor, project name, project location, report date, signature of TAB supervisor who certifies the report, table of contents. The report shall contain a summary of contents including the following, indicated versus final performance, notable characteristics of systems, description of system operation sequence if it varies from the Contract Documents, nomenclature sheets for each item of equipment, data for terminal units, including manufacturer's name, type, size, and fittings, notes to explain why certain final data in the body of reports vary from indicated values, test conditions for fans performance forms including settings for outdoor-, return-, and exhaust-air dampers, conditions of filters, cooling coil, wet- and dry-bulb conditions, fan drive settings including settings and percentage of maximum pitch diameter and other system operating conditions that affect performance.
10. **Duct Insulation: Mineral-Fiber Blanket Insulation:** Mineral or glass fibers bonded with a thermosetting resin. Comply with ASTM C 553, Type II and ASTM C 1290, Type III with factory-applied FSK jacket (FSK Jacket: Aluminum-foil, fiberglass-reinforced scrim with kraft-paper backing; complying with ASTM C 1136, Type II). FSK Jacket Adhesive shall comply with MIL-A-3316C, Class 2, Grade A for bonding insulation jacket lap seams and joints. Insulation nominal density of 1.5 lbs/cu.ft for 1½-2" thicknesses and 0.75 lbs/cu.ft for 3" thick. Mineral-Fiber Board Insulation: Mineral or glass fibers bonded with a thermosetting resin. Comply with ASTM C 612, Type 1A or Type 1B with factory-applied FSK jacket (FSK Jacket: Aluminum-foil, fiberglass-reinforced scrim with kraft-paper backing; complying with ASTM C 1136, Type II). FSK Jacket Adhesive shall comply with MIL-A-3316C, Class 2, Grade A for bonding insulation jacket lap seams and joints. Insulation nominal density shall be 3 lbs/cu.ft.

    Exhaust Air (exposed): 1" FG Board for the first 10 feet from wall or roof penetration including exhaust plenum.

    Exhaust Air (concealed): 1-1/2" FG Blanket for the first 10 feet from outside wall or roof penetration including exhaust plenum.
11. **Metal Ducts:** Comply with SMACNA's "HVAC Duct Construction Standards - Metal and Flexible" based on indicated static-pressure class unless otherwise indicated. Select joint types and fabricate according to SMACNA's "HVAC Duct Construction Standards - Metal and Flexible," Figure 2-1, "Rectangular Duct/Transverse Joints," for static-pressure class, applicable sealing requirements, materials involved, duct-support intervals, and other provisions in SMACNA's "HVAC Duct Construction Standards - Metal and Flexible." Select seam types and fabricate according to SMACNA's "HVAC Duct Construction Standards - Metal and Flexible," Figure 2-2, "Rectangular Duct/Longitudinal Seams," for static-pressure class, applicable sealing requirements, materials involved, duct-support intervals, and other provisions in SMACNA's "HVAC Duct Construction Standards - Metal and Flexible." Elbows, Transitions, Offsets, Branch Connections, and Other Duct Construction, select types and fabricate according to SMACNA's "HVAC Duct Construction Standards - Metal and Flexible," Chapter 4, "Fittings and Other Construction," for static-pressure class, applicable sealing requirements, materials involved, duct-support intervals, and other provisions in SMACNA's "HVAC Duct Construction Standards - Metal and Flexible." Materials shall comply with SMACNA's "HVAC Duct Construction Standards - Metal and Flexible" for acceptable materials, material thicknesses, and duct construction methods unless otherwise indicated. Sheet metal materials shall be free of pitting, seam marks, roller marks, stains, discolorations, and other imperfections. Galvanized sheet steel shall comply with ASTM A 653/A 653M with a galvanized coating designation of G60. Carbon-Steel Sheets: Comply with ASTM A 1008/A 1008M, with oiled, matte finish for exposed ducts. Stainless-Steel Sheets: Comply with ASTM A 480/A 480M, Type 304 or 316, as indicated in the "Duct Schedule" Article; cold rolled, annealed, sheet. Aluminum Sheets: Comply with ASTM B 209 (ASTM B 209M) Alloy 3003, H14 temper; with mill finish for concealed ducts, and standard, one-side bright finish for duct surfaces exposed to view. Sealants and gaskets shall have surface-burning characteristics with a maximum flame-spread index of 25 and a maximum smoke-developed index of 50 when tested according to UL 723; certified by an NRTL. Hanger rods for noncorrosive environments shall be cadmium-plated steel rods and nuts. Strap and rod sizes shall comply with SMACNA's "HVAC Duct Construction Standards - Metal and Flexible," Table 5-1, "Rectangular Duct Hangers Minimum Size," and Table 5-2, "Minimum Hanger Sizes for Round Duct."
12. **Round Longitudinal Seam Ducts (Single Wall):** General Fabrication Requirements: Comply with SMACNA's "HVAC Duct Construction Standards - Metal and Flexible," Chapter 3, "Round, Oval, and Flexible Duct," based on indicated static-pressure class unless otherwise indicated. Transverse Joints: Select joint types and fabricate according to SMACNA's "HVAC Duct Construction Standards - Metal and Flexible," Figure 3-1, "Round Duct Transverse Joints," for static-pressure class, applicable sealing requirements, materials involved, duct-support intervals, and other provisions in SMACNA's "HVAC Duct Construction Standards - Metal and Flexible." Longitudinal Seams: Select seam types and fabricate according to SMACNA's "HVAC Duct Construction Standards - Metal and Flexible," Figure 3-2, "Round Duct Longitudinal Seams," for static-pressure class, applicable sealing requirements, materials involved, duct-support intervals, and other provisions in SMACNA's "HVAC Duct Construction Standards - Metal and Flexible." Tees and Laterals: Select types and fabricate according to SMACNA's "HVAC Duct Construction Standards - Metal and Flexible," Figure 3-5, "90 Degree Tees and Laterals," and Figure 3-6, "Conical Tees," for static-pressure class, applicable sealing requirements, materials involved, duct-support intervals, and other provisions in SMACNA's "HVAC Duct Construction Standards - Metal and Flexible."
13. **Turning Vanes:** Manufactured turning vanes for metal ducts shall be curved blades of galvanized sheet steel; support with bars perpendicular to blades set; set into vane runners suitable for duct mounting. Turning vanes shall comply with SMACNA's "HVAC Duct Construction Standards - Metal and Flexible"; Figures 4-3, "Vanes and Vane Runners," and 4-4, "Vane Support in Elbows." Van construction shall be single wall
14. **In-Line Centrifugal Fans:** Housing shall be split, spun aluminum with aluminum straightening vanes, inlet and outlet flanges, and support bracket adaptable to floor, side wall, or ceiling mounting. Direct-drive units shall have motor mounted in airstream, factory wired to disconnect switch located on outside of fan housing. Belt-driven units shall have motor mounted on adjustable base, with adjustable sheaves, enclosure around belts within fan housing, and lubricating tubes from fan bearings extended to outside of fan housing. Fan wheels shall be aluminum, airfoil blades welded to aluminum hub. Provide fan with variable-speed controller, solid-state control to reduce speed from 100 to less than 50 percent, companion flanges on inlet and outlet duct connections, fan guards with 1/2- by 1-inch mesh of galvanized steel in removable frame. Provide guard for inlet or outlet for units not connected to ductwork and motor and drive cover (belt guard) of epoxy-coated steel. Provide elastomeric hangers and flexible connections on fans that are not internally isolate
15. **Louvers:** Formed Steel Drainable Stationary Louvers: Ruskin Model EL375 or equal. Louvers frame shall be constructed of roll formed galvanized steel, 18 gage, 4 inches deep, with downspouts and caulking surfaces. Blades shall be drainable constructed of 18 gage roll formed galvanized steel at an angle of 37.5 degrees at 3-1/2 inches ceters, nominal. Bird Screen shall be galvanized steel, 1/2 inch mesh x 19 gage, intercrimp with removable, rewireable frame. Drain gutters shall be provided in each blade. Downspouts shall be provided in jambs to drain water from louver for minimum water cascade from blade to blade. Supports shall be hidden vertical supports to allow continuous line appearance. Louver components shall be factory assembled with all welded construction. Performance Ratings: AMCA licensed. Performance Data shall be based on testing 48 inch x 48 inch size unit in accordance with AMCA 500. Free Area shall be 51 percent, nominal. Maximum Pressure Drop: 0.10 inches w.g. Water Penetration: Maximum of 0.01 ounces per square foot of free area at an air flow of 961 feet per minute free area velocity when tested for 15 minutes. Accessories: Blank-Off Panels: 20 gage galvanized steel sheet, 1 inch galvanized steel skin, insulated core, factory installed with removable fasteners and neoprene gaskets. Hinged Frame: Continuous piano hinge attached to [angle] [channel] subframe. [Front] [Rear] Security Bars: Galvanized steel, [1/2 inch x 1/2 inch] [3/4 inch x 1/2 inch, welded to louver. Filter Racks: Formed channel racks to accept standard [1 inch] [2 inch] thick filters. Unused bottom portion blanked off with 20 gage galvanized steel sheet. Bird Screens. Insect Screens. Extended Sills: Galvanized steel, 20 gage. Visible Mullions: Manufacturer's standard horizontal or vertical visible mullions for architectural accent as indicated on drawings. Factory Finish: Standard mill finish.
16. **Installation:** All work and materials shall be in accordance with the applicable sections of the N.C. Building Code and local codes and ordinances. Equipment and materials shall be installed in compliance with manufacturer's installation recommendations and acceptable industry standards. The mechanical contractor is responsible for verifying existing conditions and dimensions before beginning work. Perform all work in a neat workman-like manner and in accordance with industry standards.

2018 APPENDIX B BUILDING CODE SUMMARY:

MECHANICAL SYSTEMS, SERVICE SYSTEMS AND EQUIPMENT

Method of Compliance
[X] Prescriptive [ ] Energy Cost Budget

Thermal Zone **4**
Winter Dry Bulb: **16°F**
Summer Dry Bulb: **85°F**

Interior Design Conditions
Winter Dry Bulb: **68°F**
Summer Dry Bulb: **75°F**
Relative Humidity: **50%**

Building Heating Load: **70 mbh**

Building Cooling Load:

Mechanical Spacing Conditioning System
Unitary
description of unit: **Electric ceiling & wall heaters**
heating efficiency: **See Schedules**
cooling efficiency: **See Schedules**
heat output of unit: **See Schedules**
cooling output of unit: **See Schedules**
Boiler
total boiler output. If oversized, state reason. **n/a**
Chiller
total chiller capacity. If oversized, state reason. **n/a**

List equipment efficiencies: **See Schedules**

Equipment schedules with motors (mechanical systems)
motor horsepower: **- see schedules**
number of phases: **- see schedules**
minimum efficiency: **- manufacturer's standard meeting ASHRAE 90.1**
motor type: **- manufacturer's standard**
# of poles: **- manufacturer's standard**

FINAL DRAWING
11-17-2023

TILDEN WHITE & ASSOCIATES, PLLC
15 W. Walnut St #202, Asheville, NC 28801
828-255-4327 Project: 22105

BUNCOMBE COUNTY SPORTS PARK
RESTROOM BUILDING

58 APAC DRIVE
ASHVILLE, NC

Prepared For
BUNCOMBE COUNTY

DOMOKUR ARCHITECTS

4651 Medina Road
Akron, Ohio 44321-1315
p 330.666.7878

43 South Broad Street, Suite 201
Brevard, North Carolina 28712-3738
p 828.884.8478
www.domokur.com

Issue	Date	Description

MECHANICAL NOTES & SCHEDULES

Project No:
Project Manager:
Drawn By: TWA

M1

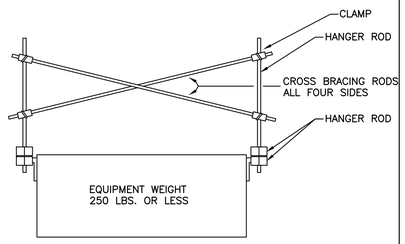

NOTE: NOT REQUIRED FOR AIR TERMINAL UNITS.

5 / M2 SEISMIC BRACING FOR LIGHT SUSPENDED EQUIPMENT
SCALE: NONE

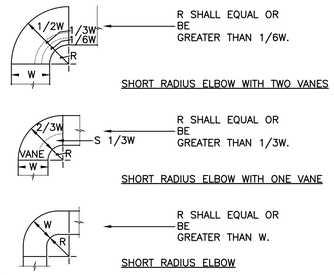

NOTE:
1. THE INTERIOR SURFACE OF ALL RADIUS ELBOWS SHALL BE MADE ROUND.
2. ALL STANDARD RADIUS ELBOWS SHOWN ON PLANS MAY BE MADE SHORT RADIUS ELBOWS. ALL SHORT RADIUS ELBOWS SHALL HAVE VANES. VANES SHALL BE CONSTRUCTED, SUPPORTED AND FASTENED AS RECOMMENDED BY SMACNA.

4 / M2 SHORT RADIUS ELBOW DETAILS
SCALE: NONE

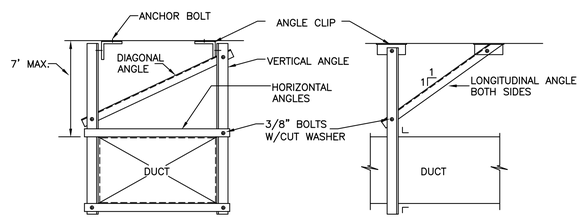

MAXIMUM DIAMETER	ANGLE CLIP	CONCRETE ANCHOR OR INSERT	BRACING ANGLES VERTICAL	BRACING ANGLES ALL OTHERS
UP TO 60"	3x3x1/4	1/2"	4x4x12GA	3x3x16GA
61" TO 84"	4x4x1/2	5/8"	4x4x1/4"	4x4x12GA
85" TO 96"	4x4x1/2	5/8"	5x3x1/4"	4x4x12GA

3 / M2 SEISMIC BRACING FOR LIGHT SUSPENDED EQUIPMENT
SCALE: NONE

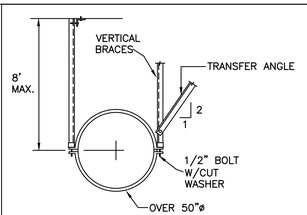

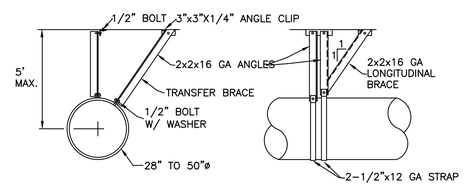

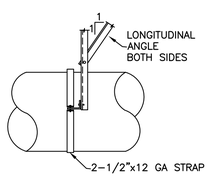

MAXIMUM DIAMETER	ANGLE CLIP	CONCRETE ANCHOR OR INSERT	BRACING ANGLES
50" TO 60"	5"x3"x1/2"	1/2"	4"x4"x12GA
61" TO 84"	5"x3"x1/2"	5/8"	4"x4"x12GA

2 / M2 SEISMIC BRACING FOR ROUND/OVAL DUCTS
SCALE: NONE

KEYED NOTES:

1. COORDINATE CEILING HEATER LOCATION WITH LIGHTING AND STRUCTURAL PLANS.
2. COORDINATE EF-1, DUCTWORK AND GRILLE LOCATIONS WITH STRUCTURAL AND LIGHTING PLANS.
3. COORDINATE WALL HEATER LOCATION WITH TOILET CARRIER DIMENSIONS AND WITH PLUMBING CONTRACTOR.
4. EXHAUST FAN PROGRAMMABLE CONTROL WITH 2 SPEED TIMER.

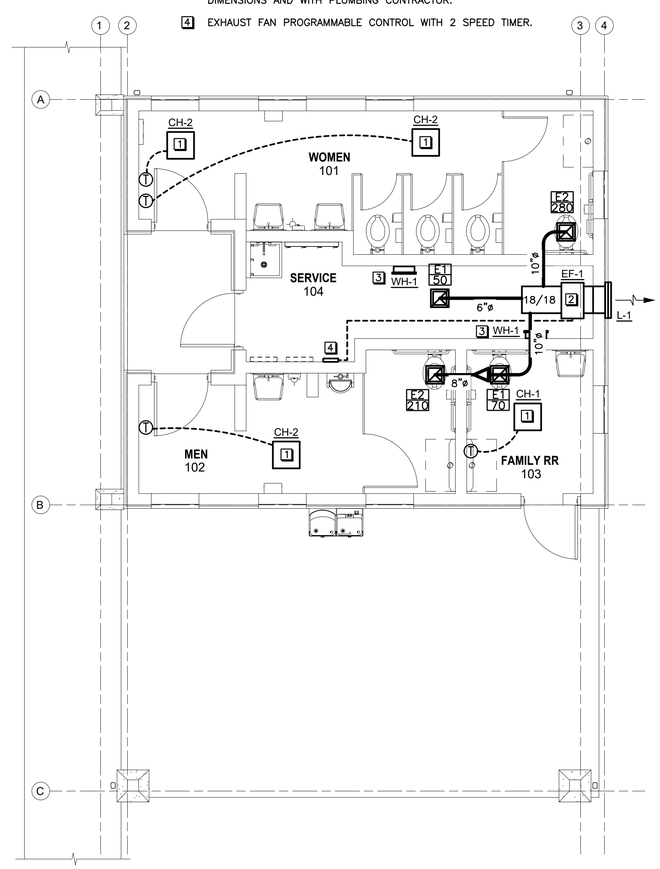

1 / M2 MECHANICAL PLAN
SCALE: 1/4" = 1'-0"

FINAL DRAWING

11-17-2023

TILDENWHITE & ASSOCIATES, PLLC
15 W. Walnut St #202, Asheville, NC 28801
828-255-4327 Project: 22105

BUNCOMBE COUNTY SPORTS PARK
RESTROOM BUILDING

58 APAC DRIVE
ASHVILLE, NC

Prepared For
BUNCOMBE COUNTY

DOMOKUR | ARCHITECTS

4651 Medina Road
Akron, Ohio 44321-1315
p 330.666.7878

43 South Broad Street, Suite 201
Brevard, North Carolina 28712-3738
p 828.884.8478
www.domokur.com

Issue	Date	Description

MECHANICAL PLAN

NORTH

Project No:
Project Manager:
Drawn By: TWA

M2

ELECTRICAL SYMBOL LEGEND

SYMBOL	DESCRIPTION
J	JUNCTION BOX PER N.E.C.
LP1-2	HOMERUN – PANEL DESIGNATION AND CIRCUIT NUMBER
$	SINGLE POLE SWITCH – 20A – 120/277V – MOUNT 46" A.F.F. TO BOTTOM
$D	DIMMER SWITCH
$3	THREE-WAY SWITCH – 20A – 120/277V – MOUNT 46" A.F.F. TO BOTTOM
$$	INDICATES SWITCHES ARE TO PROVIDE MULTIPLE LIGHT LEVELS (INBOARD, OUTBOARD SWITCHING OF LAMPS)
	115 OR 277 VOLT MOTOR AS NOTED ON PLANS
	FUSED OR NON-FUSIBLE HEAVY DUTY DISCONNECT SWITCH – BY DIVISION 16
$M	2-POLE OR 3-POLE MANUAL MOTOR STARTER. PROVIDE WITH OVERLOAD PROTECTION.
OS	WALL MOUNTED OCCUPANCY SENSOR, SOUND AND MOTION ACTIVATED – SENSOR SWITCH WSX-PDT (WSX-PDT-2P FOR TOILET ROOMS)
OS	CEILING MOUNTED OCCUPANCY SENSOR WITH DUAL STAGE ILLUMINATION – NLIGHT RCMS-PS150-PDT-10-AR-G2 – VERIFY EXACT WIRING REQUIREMENTS WITH MANUFACTURERS CUT SHEETS BEFORE BEGINNING ANY WORK.
XXX	STANDARD 20A OUTLET – NEMA 5-20R DUPLEX. MOUNT 16" A.F.F. "GFI" DENOTES GROUND FAULT TYPE, NON-FEED THRU, "EWC" DENOTES OUTLET FOR ELECTRIC WATER COOLER – COORDINATE LOCATION WITH PLUMBING CONTRACTOR – NEMA 5-20R DUPLEX "WP" DENOTES WEATHERPROOF IN USE NEMA 5-20R DUPLEX, "ACT" DENOTES MOUNTED ABOVE COUNTER TOP OR BACKSPLASH, "BB" DENOTES MOUNTED ON THE BACKSIDE OF THE BAR JUST BENEATH THE BARTOP TYPICAL FOR RESTAURANTS AND BARS, "TR" DENOTES TAMPER RESISTANT. "USB" DENOTES LEGRAND TM826USB.
	TWO STANDARD 20A OUTLETS IN A 2-GANG BOX – NEMA 5-20R DUPLEX – COMMON COVER PLATE – MOUNT 16" A.F.F. TO BOTTOM OF DEVICE.
	STANDARD 20A OUTLET IN FLOOR BOX – NEMA 5-20R DUPLEX – LEGRAND WIREMOLD RFB2 FLOOR BOX.
▼	TELEPHONE/DATA OUTLET MTD. 16" AFF TO BOTTOM. PROVIDE 1" CONDUIT WITH PULL CORD FROM OUTLET TO COMMUNICATION BACKBOARD. STUB OUT 6" ABOVE BACKBOARD. PROVIDE NYLON BUSHING ON END OF CONDUIT. OUTLET BOX SHALL BE A 4" SQ. BOX WITH SINGLE GANG PLASTER RING. PROVIDE BLANK COVERPLATE ON OUTLET BOX.
TV	CABLE TV OUTLET MTD. 16" AFF TO BOTTOM OR AS INDICATED. PROVIDE 1" CONDUIT WITH PULL CORD FROM OUTLET TO COMMUNICATION BACKBOARD. STUB OUT 6" ABOVE BACKBOARD. PROVIDE NYLON BUSHING ON END OF CONDUIT. OUTLET BOX SHALL BE A 4" SQ. BOX WITH SINGLE GANG PLASTER RING. PROVIDE BLANK COVERPLATE ON OUTLET BOX.
⏚	GROUNDING FOR SERVICE OR SEPARATELY DERIVED SYSTEM, PER N.E.C.
	SPECIAL POWER OUTLET.

WIRING DEVICE NOTES

1. Switches shall be Hubbell CS115 or equivalent and receptacles shall be Hubbell CR20 or equivalent. Devices shall be white or as directed by architect.
2. Switches shall be as follows:

single pole 20 amp	CSB20AC1-I
3 way 20 amp	CSB20AC3-I
4 way 20 amp	CSB20AC4-I
motor starter switch	Square D type "K" series

3. Duplex receptacle shall be as follows:

20 amp duplex	PS5362I
20 amp duplex-GFCI	2095IL
20 amp duplex-Weather GFI	2095TRWRI

Note: Duplex receptacles have nylon face and side wire type. Receptacles shall have brass contacts, brass terminal screws and green ground wire screw. GFCI receptacle shall be included with a trip indicator light.

4. Coverplates shall be oversized stainless steel SSJX or as directed by architect.
5. Outlet boxes shall not be mounted back-to-back.
6. Receptacles shall be 20 amp unless 15 amp is required by equipment served.
7. Weatherproof in use covers shall be clear equal to Leviton. For horizontal mount covers use part no. "5997-CL". For vertical mount covers use part no. "5977-CL".
8. All outlets (including telephone and data) shall have cover plates.

2018 APPENDIX B BUILDING CODE SUMMARY:

ELECTRICAL SYSTEM AND EQUIPMENT

Method of Compliance:

Energy Code:	[X] Prescriptive	[ ] Performance
ASHRAE 90.1:	[X] Prescriptive	[ ] Performance

Lighting schedule(each fixture type)

lamp type required in fixture	(see fixture schedule)
number of lamps in fixture	(see fixture schedule)
ballast type used in the fixture	(see fixture schedule)
number of ballasts in fixture	(see fixture schedule)
total wattage per fixture	(see fixture schedule)
total interior wattage (whole space allowable)	NOT TO EXCEED 2.3KW
total exterior wattage specified vs. allowed	NOT TO EXCEED 600WATTS

Additional Prescriptive Compliance:

C406.2 :More Efficient Mechanical Equipment	[X] Prescriptive	[ ] Performance
C406.3 :Reduced Lighting Power Density	[ ] Prescriptive	[ ] Performance
C406.4 :Energy Recovery Ventilation System	[ ] Prescriptive	[ ] Performance
C406.5 :Higher Efficiency Service Water Heating	[ ] Prescriptive	[ ] Performance
C406.6 :On-Site Supply of Renewable Energy	[ ] Prescriptive	[ ] Performance
C406.7 :Automatic Daylighting Control Systems	[ ] Prescriptive	[ ] Performance

BRANCH CIRCUIT CONDUCTOR SIZING TABLE

For circuits with branch circuit protection rated 20 amps or less, copper conductors shall be sized according to the following:

voltage	distance (ft)	home run (AWG)	remainder (AWG)
120	0 - 50	12	12
	50 - 90	10	12
	90 - 140	8	10
	140 +	6	10
240	0 - 95	12	12
	95 - 160	10	12
	160 - 250	8	10
	250 +	6	10

ELECTRICAL NOTES

1. The intent of these drawings and specifications are to describe the installation of a complete, fully adjusted, and operational system.
2. Provide five sets of electrical equipment submittals to the GC for the architect, engineer, GC and owner to review and approve prior to purchasing.
3. The contractor shall provide all supervision, labor, material, equipment. machinery, and any and all other items necessary to complete the system. All work shall be performed in a neat and workmanlike manner in accordance with industry standards.
4. All work under this section shall be accomplished in strict accordance with state building codes and the National Electric Code. Coordinate with local power company requirements.
5. The contractor shall obtain all necessary approval, obtain all permits and pay all fees required for the installation of their work.
6. The drawings are diagrammatic only. The contractor may need to make field adjustments to accommodate actual field conditions.
7. Devices located in rated walls shall have sufficient separation from other devices to allow proper installation and firestopping.
8. The contractor shall refer to the architectural and structural drawings for the general construction of the building, for floors and ceiling heights, for locations of wall, partitions, beams, etc.
9. Manufacturer's listed are to establish a standard of quality and not intended to limit the selection to these manufacturers. Any substitutions must be approved by the architect and engineer.
10. Contractor shall verify all listed model numbers with manufacturers to insure proper application of equipment.
11. Equipment and materials shall be handled, stored and protected in accordance with the manufacturer's recommendations.
12. The contractor shall perform any and all trenching, excavation and backfilling required for the installation of this work.
13. The contractor shall furnish all necessary scaffolding, staging, rigging and hoisting required for the completion of this work.
14. All work shall be coordinated with the general contractor and other trades involved in the construction project. All work shall be carefully laid out in advance to coordinate architectural, structural, mechanical, plumbing and electrical features of construction.
15. The electrical contractor shall visit the site before submitting his bid so as to be thoroughly familiar with the job conditions and/or peculiarities. No extra payment will be allowed for anything which could have been anticipated from a visit to the site.
16. Equipment shall be installed in accordance with manufacturer's written instructions.
17. Provide grounding for all conduits, motor frames, metal casings, receptacles, system neutral, etc. and as required by NEC as minimum. Resistance to ground shall not exceed 25 OHMS.
18. A green insulated copper ground wire, sized per NEC, shall be installed in all raceways, electric metallic tubing used for feeders, branch circuits, flexible conduit, and as otherwise noted on the drawings.
19. All fixtures shown on the plans shall be furnished and installed, complete with all mounting accessories, lamps and tubes. Fixtures shall be independently supported from structure. Re-use existing fixtures that are in good condition. If additional fixtures need to be supplied, match existing fixtures.
20. All wiring shall be run in conduit. The minimum indoor conduit size shall be ½". Indoor conduit shall be electrical metallic tubing or type MC cable may be used for branch circuits where allowed by NEC and not subject to physical damage, moisture or dampness. Connection to equipment shall be flexible metal conduit except in wet or damp locations use liquid tight flexible metal conduit. Indoor boxes and enclosures shall be NEMA type 1, except in damp or wet locations use NEMA type 4, stainless steel. Where nonmetallic conduit is used below the slab, provide a minimum of Schedule 80 PVC conduit to turn up into the building space or at any exterior walls, inside or outside framed walls, exterior landscape poles, or equipment. Use raceway fittings compatible with raceway and suitable for use and location. Run concealed raceways with a minimum of bends in the shortest practical distance considering the type of building construction and obstructions. Raceways shall run parallel to or at right angles to nearby surfaces or structural members, and follow the surface contours as much as practical. Provide grounding connections for raceway, boxes, and components as indicated and instructed by manufacturer. Tighten connections and terminals, including screws and bolts, according to equipment manufacturer's published torque-tightening values for equipment connectors. Where manufacturer's torquing requirements are not indicated, tighten connectors and terminals according to tightening torques specified in UL standard 486A.
21. All underground raceways shall be identified by "underground line marking tape" located directly above the raceway at 6" below finished grade. Tape shall be permanent, bright-colored, continuous, magnetic strip, printed plastic tape compounded for direct burial not less than 6" wide and 4mils thick. Printed legend shall be indicative of the service it is marking. Conduits exposed to different temperatures shall be sealed as required by NEC Article 300.7A.
22. Color for devices shall be coordinated with the general contractor.
23. Receptacles shall comply with UL Standard 498, "electrical attachment plugs and receptacles," heavy-duty grade 20 AMP rated except as otherwise indicated.
24. Ground-fault circuit interrupter (GFI) receptacles shall comply with UL Standard 943. "Ground fault circuit interrupters," with integral NEMA 5-20R duplex receptacle.
25. Single pole and three/four-way toggle type snap switches shall be 20 AMP 120/277 V. AC., rated, quite-type A.C. switches. NRTL listed and labeled as complying with UL Standard 20 "general use snap switches," and with federal specification W-S-896.

Wall plates: single and combination types shall be 302 stainless steel that mate and match with corresponding wiring devices. EC shall label all receptacle plates with panel and circuit designation.

26. Conductors shall be color coded in accordance with NEC as follows:

Phase	240/120 Volts	~~480/277 Volts~~
A	Black	~~Brown~~
B	Red	~~Orange~~
~~C~~	~~Blue~~	~~Yellow~~
Neutral	White	~~Gray~~
Ground	Green	~~Green~~

27. Electrical equipment shall be identified with labels of engraved plastic-laminate on each major unit of electrical equipment.
28. Panelboards/loadcenters shall be type, rating, and features as indicated on the schedules. Enclosures shall be NEMA type 1, flush or surface mounted as indicated. Cabinet shall be code gauge, galvanized steel. Fronts shall be sheet steel with gray lacquer finish with hinged locking door. Ground and neutral bus shall be 100% rated. Bus shall be copper or aluminum. Main and neutral lugs shall be plug-on type. Equipment ground bus shall be adequate for feeder and branch-circuit equipment ground conductors bonded to box. Directory frame shall be metal, mounted inside each panel door. At the completion of this installation, type circuit designations on the directory card and leave in the card holder provided inside cabinet doors. Tandem circuit breakers shall not be used. Multi-pole breakers shall have common trip. The minimum interrupting rating for circuit breakers rated at 120/240 volts shall be 22,000 AMPS RMS symmetrical. For flush mounted panels provide a minimum of (4) -1" conduits stubbed to the ceiling space for future use.
29. All wiring for equipment shall be copper with one of the following types of insulation: THW, THHW, THWN with a rating of at least 75 DEG. C. All wiring located above the ceiling shall be plenum-rated.
30. Final locations of all exit and emergency lights shall be verified with the building inspector prior to installation.
31. Branch circuits shall not exceed 80% of overcurrent protection. Devices shall be relocated to another circuit if found to be in excess of 80%.
32. Electrical contractor shall be responsible to supply a coordinated study as described in the NEC or as required by permitting officials with all gear submitted involving generators, elevators, or any life safety equipment.

NORTH CAROLINA PROFESSIONAL SEAL 028953 ENGINEER TILDEN A. WHITE
FINAL DRAWING
FOR REVIEW PURPOSES ONLY

11-17-2023

TILDEN WHITE & ASSOCIATES, PLLC
15 W. Walnut St #202, Asheville, NC 28801
828-255-4327 Project: 22105

BUNCOMBE COUNTY SPORTS PARK
RESTROOM BUILDING

58 APAC DRIVE
ASHVILLE, NC

Prepared For
BUNCOMBE COUNTY

DOMOKUR | ARCHITECTS

4651 Medina Road
Akron, Ohio 44321-1315
p 330.666.7878

43 South Broad Street, Suite 201
Brevard, North Carolina 28712-3738
p 828.884.8478
www.domokur.com

Issue	Date	Description

ELECTRICAL NOTES
& SCHEDULES

Project No:
Project Manager:
Drawn By: TWA

E1

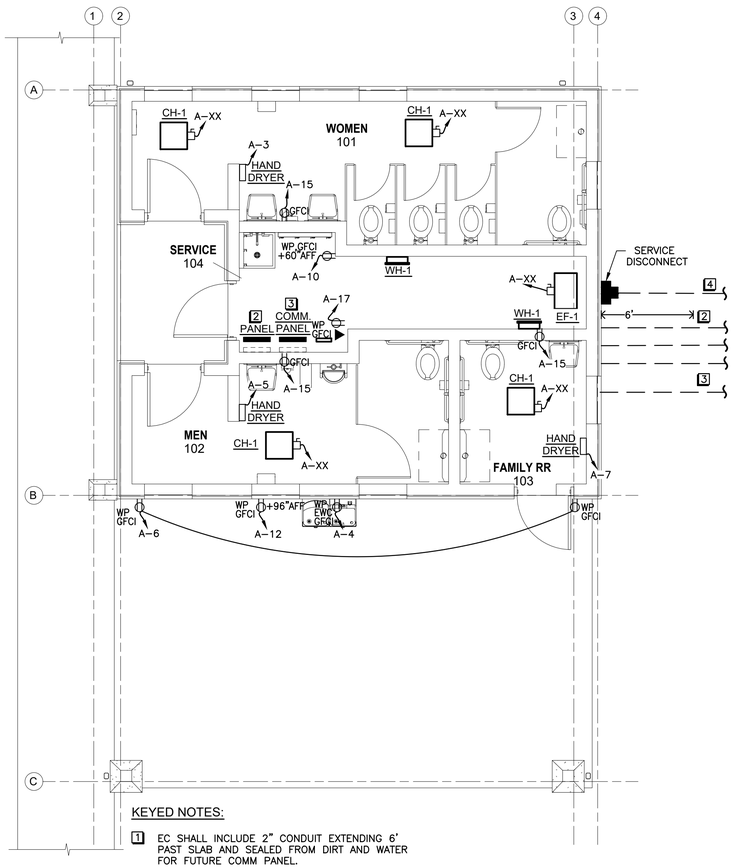

KEYED NOTES:

1. EC SHALL INCLUDE 2" CONDUIT EXTENDING 6' PAST SLAB AND SEALED FROM DIRT AND WATER FOR FUTURE COMM PANEL.
2. EC SHALL INSTALL THREE(3) 3/4" CONDUITS EXTENDING FROM PANEL "A" TO 6' PAST THE SLAB FOR FUTURE USE. CONDUIT TO BE EFFECTIVELY SEALED FROM SURROUNDING ENVIRONMENT.
3. EC SHALL INSTALL ONE(1) 2" CONDUIT FROM COMMUNICATION PANEL LOCATION TO 6' PAST THE SLAB FOR FUTURE USE. CONDUIT TO BE EFFECTIVELY SEALED FROM SURROUNDING ENVIRONMENT.
4. EC SHALL INSTALL ONE(1) 2" CONDUIT FROM SERVICE DISCONNECT TO EXISTING LIGHTING SERVICE PANEL/TRANSFORMER.

2 / E2 POWER PLAN
SCALE: 1/4" = 1'-0"

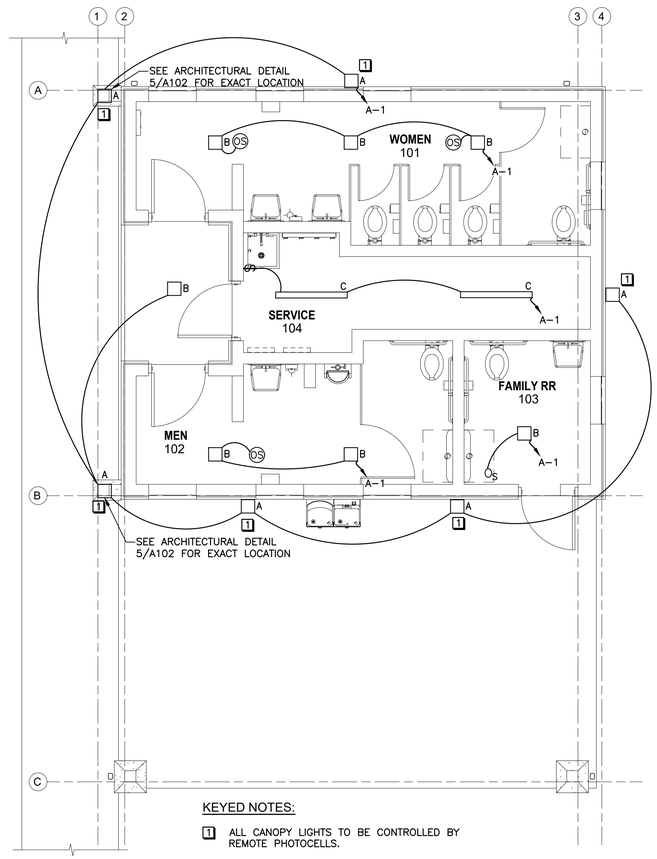

KEYED NOTES:

1. ALL CANOPY LIGHTS TO BE CONTROLLED BY REMOTE PHOTOCELLS.

1 / E2 LIGHTING PLAN
SCALE: 1/4" = 1'-0"

LIGHTING FIXTURE SCHEDULE

TAG	TYPE: INCAND.	TYPE: FLUOR.	TYPE: LED	TYPE: METAL HAL.	TYPE: H.P.S.	TYPE: OTHER	VOLTAGE	FIXTURE WATTS	LAMPS: NUMBER	LAMPS: WATTS / TYPE	MOUNTING: RECESSED	MOUNTING: CEILING	MOUNTING: PENDANT	MOUNTING: WALL	MOUNTING: LANDSCAPE	# OF BALLASTS	DESCRIPTION	MANUFACTER & MODEL (OR EQUAL)
A			X				120	15	-	LED				X			LED VANDALPROOF SCONCE	KENALL FN15-2-7-MB-16L-40K8-120
B			X				120	25	-	LED		X					LED VANDALPROOF LIGHT	LUMINAIRE VPF84-25W-35K-CC-120-CP-BLK
C			X				120	38	-	LED		X					LED STRIP LIGHT	LITHONIA CDS-L48-MVOLT-35K-80CRI

1. CONTRACTOR SHALL COMPLY WITH INSULATION CONTACT (IC) RATING FOR RECESSED FIXTURES WHERE INSULATION IS INSTALLED DIRECTLY ABOVE. CEILING (SEE ARCHITECTURAL SHEETS).
2. VERIFY MOUNTING HEIGHT WITH OWNER PRIOR TO INSTALLATION

NORTH CAROLINA PROFESSIONAL SEAL 028953 ENGINEER TILDEN A. WHITE
FINAL DRAWING
FOR REVIEW PURPOSES ONLY
11-17-2023

TILDENWHITE & ASSOCIATES, PLLC
15 W. Walnut St #202, Asheville, NC 28801
828-255-4327 Project: 22105

BUNCOMBE COUNTY SPORTS PARK
RESTROOM BUILDING

58 APAC DRIVE
ASHVILLE, NC

Prepared For
BUNCOMBE COUNTY

DOMOKUR | ARCHITECTS
4651 Medina Road
Akron, Ohio 44321-1315
p 330.666.7878
43 South Broad Street, Suite 201
Brevard, North Carolina 28712-3738
p 828.884.8478
www.domokur.com

Issue	Date	Description

ELECTRICAL PLAN

NORTH

Project No:
Project Manager:
Drawn By: TWA

E2

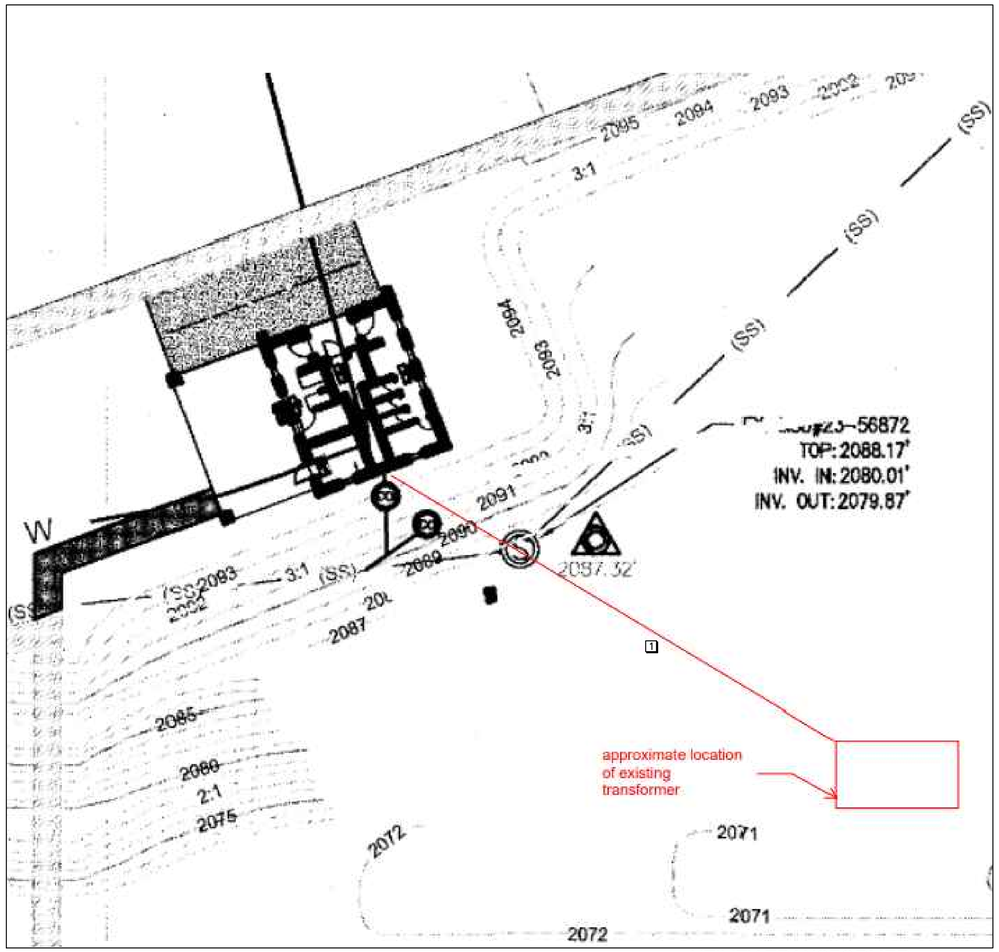

KEYED NOTES:

1. EC SHALL COORDINATE WITH OWNER AND GC TO TRENCH FOR NEW SERVICE ENTRANCE CONDUCTORS.

2/E3 UTILITY TRANSFORMER LOCATION DETAIL
SCALE: NOT TO SCALE

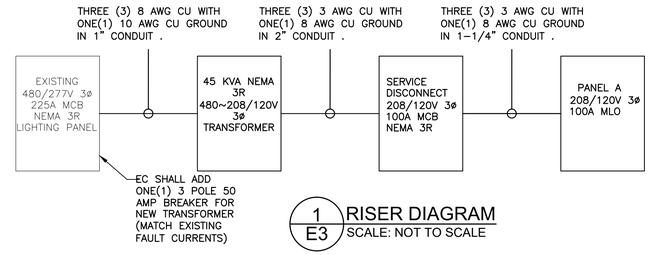

1/E3 RISER DIAGRAM
SCALE: NOT TO SCALE

LOCATION: SERVICE BAYS
MANUFACT.: SQ-D
MODEL: NQOD
MOUNTING: SURFACE

PANEL: **A**
FED FROM: MDP
FULLY RATED 37,000 AIC

VOLTS		Ph	W
208	120	3	4

CONN VA	#	LOAD	Ph	N	G	C	BKR	A	B	C	BKR	Ph	N	G	C	LOAD	#	CONN VA
220	1	LIGHTS & EF1	12	12	12	1/2	20				20	12	12	12	1/2	EF1	2	500
1800	3	HAND DRYER	12	12	12	1/2	20				20	12	12	12	1/2	EWC	4	1200
1800	5	HAND DRYER	12	12	12	1/2	20				20	12	12	12	1/2	REC	6	360
1800	7	HAND DRYER	12	12	12	1/2	20				20	-	-	-	-	SPARE	8	0
1800	9	CH1	12	-	12	1/2	20				20	12	12	12	1/2	REC	10	720
1500	11	-	12	-	-	-	2P				20	12	12	12	1/2	REC	12	720
1500	13	CH3	12	12	12	1/2	20				30	10	-	10	3/4	CH2	14	2000
1500	15	WH1	12	12	12	1/2	20				2P	10	-	-	-	-	16	2000
180	17	REC/COMM PNL	12	12	12	1/2	20				30	10	-	10	3/4	CH2	18	2000
1500	19	WH1	12	12	12	1/2	20				2P	10	-	-	-	-	20	2000
0	21										30	10	-	10	3/4	CH2	22	2000
0	23										2P	10	-	-	-	-	24	2000
0	25																26	0
0	27																28	0
0	29																30	0
0	31																32	0
0	33																34	0
0	35																36	0
0	37																38	0
0	39																40	0
0	41																42	0

42	SUBTOTAL AMPS Ph A	
43	SUBTOTAL AMPS Ph B	
29	SUBTOTAL AMPS Ph C	

MAIN BREAKER:	200	AMPS
MAIN LUGS:	200	AMPS (MIN)
BUS AMPACITY:	200	AMPS (MIN)

SUBTOTAL AMPS Ph A	38	
SUBTOTAL AMPS Ph B	49	
SUBTOTAL AMPS Ph C	42	

LOAD	CONNECTED	DF	DEMAND
LIGHTING	150	125	188
A/C	0	100	0
HEATING	25200	100	25200
NON-VENT MOTORS	0	100	0
VENTILATION	570	100	570
KITCHEN	0	100	0
RECEPTACLES	3180	100	3180
MISCELLANEOUS	0	100	0
FUTURE	0	100	0
TOTAL	29100		29138 (VA)
	81		81 (AMPS)

VA ph A	9520
VA ph B	11020
VA ph C	8560
TOTAL	**29.1 kVA**

NOTES
1. PANEL SHALL BE PROVIDED WITH A FULL NEUTRAL.
2. PANEL BUSSING MATERIAL SHALL BE CU.
3. PROVIDE A FULLY RATED COPPER GROUND BUS.
4. *BKR* INDICATES HACR TYPE CIRCUIT BREAKER.
5. ALL BRANCH CIRCUITS SHALL BE FED W/ COPPER CONDUCTORS.
6. *BKR INDICATES AFCI TYPE CIRCUIT BREAKER.

NORTH CAROLINA PROFESSIONAL ENGINEER SEAL 028953 TILDEN A. WHITE
FINAL DRAWING
FOR REVIEW PURPOSES ONLY
11-17-2023

TILDEN WHITE & ASSOCIATES, PLLC
15 W. Walnut St #202, Asheville, NC 28801
828-255-4327 Project: 22105

BUNCOMBE COUNTY SPORTS PARK
RESTROOM BUILDING

58 APAC DRIVE
ASHVILLE, NC

Prepared For
BUNCOMBE COUNTY

DOMOKUR | ARCHITECTS
4651 Medina Road
Akron, Ohio 44321-1315
p 330.666.7878
43 South Broad Street, Suite 201
Brevard, North Carolina 28712-3738
p 828.884.8478
www.domokur.com

Issue	Date	Description

RISER DIAGRAM &
PANEL SCHEDULES

Project No:
Project Manager:
Drawn By: TWA

E3